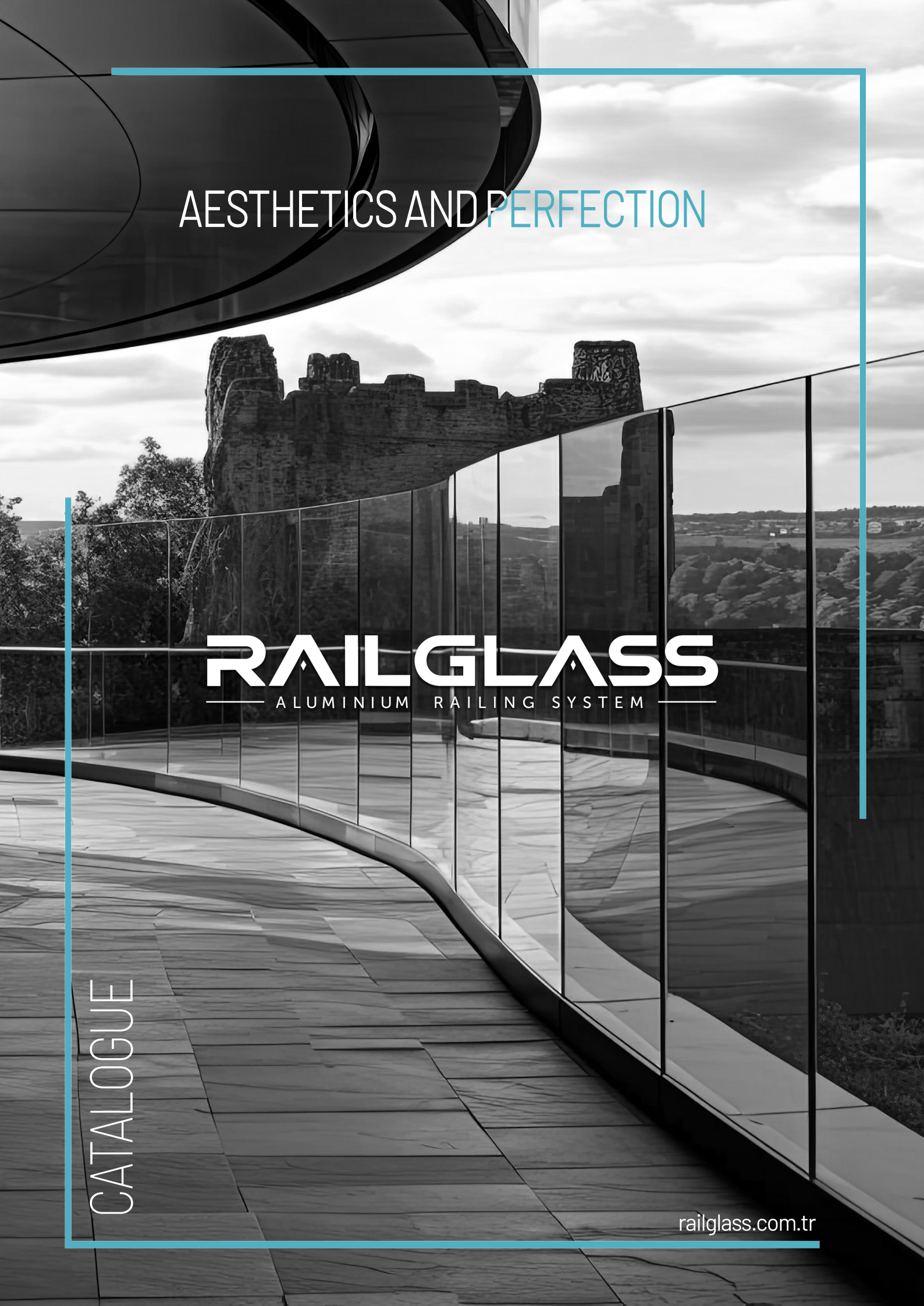
AESTHETICS AND PERFECTION
RAILGLASS
ALUMINIUM RAILING SYSTEM
CATALOGUE
railglass.com.tr

Who WE Are

Railglass Aluminum is a corporate company operating in the field of production, sales and technical services of aluminum glass systems with its 15 years of experience.

Railtech has embraced the principle of high quality products and fast service since the first day it was established.

Railglass Aluminum provides high-quality and on-time delivery of products. The company is fully equipped with high-end machinery and a well-qualified team.

The company continues its activities in the field of aluminum glass systems, both in the domestic and international markets.

Our Vision

Keeping customers satisfaction above all else,
Being open to research and development,
Creating funds and resources for continuous development,

Our Mission

To develop long-term and permanent relationships based on trust with our customers and suppliers, without compromising on quality.



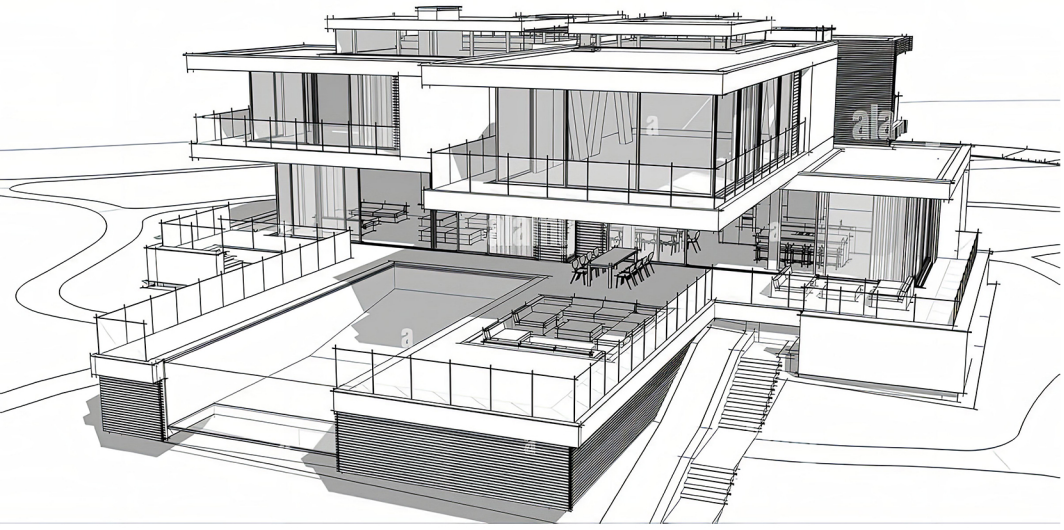

RAILGLASS
ALUMINIUM RAILING SYSTEM

AESTHETICS AND PERFECTIONIN RAILING SYSTEMS

EXCELLENCE FROM ALL POINTS OF VIEW

Only the best
- Consistent quality
- High-quality materials
- Impeccable surfaces and finishes
- Highly accurate measurements and minimal tolerances

Incredibly fast
- Everything in stock
- Fast delivery
- Personal and detailed technical advice
- Online orders 24/7

Solutions for every situation
- Wide range of products
- Many different design styles
- Everything you need to create a balustrade or handrail
- Different possible combinations for a customized design

100% safe
- Thorough internal testing
- Extensive testing by independent certified bodies and major authorities
- Tests and certifications that meet major building standards and codes

Aesthetics and functionality
- Numerous innovations and improvements every year
- Different designs to suit every taste
- Features that enable quick and easy assembly

- Installation videos, BIM objects, CAD drawings and other technical specifications
identify the correct
- Catalogues, brochures, reference projects and more

RAILGLASS
ALUMINIUM RAILING SYSTEM

INDEX / CONTENTS

GLASS RAILING SYSTEMS

R10 / R20 / R30 / R40 / R50 / R60 / R70 / R80

05



GLASS FLOOR HOLDERS

R100 / R150 / R200 / R400 / R600 +

27

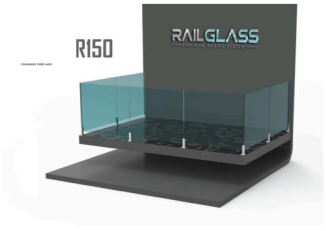

GLASS PILLARS

R5000

61



TOP GLASS PROFILES

R6000

63



R10

Installation Video Code

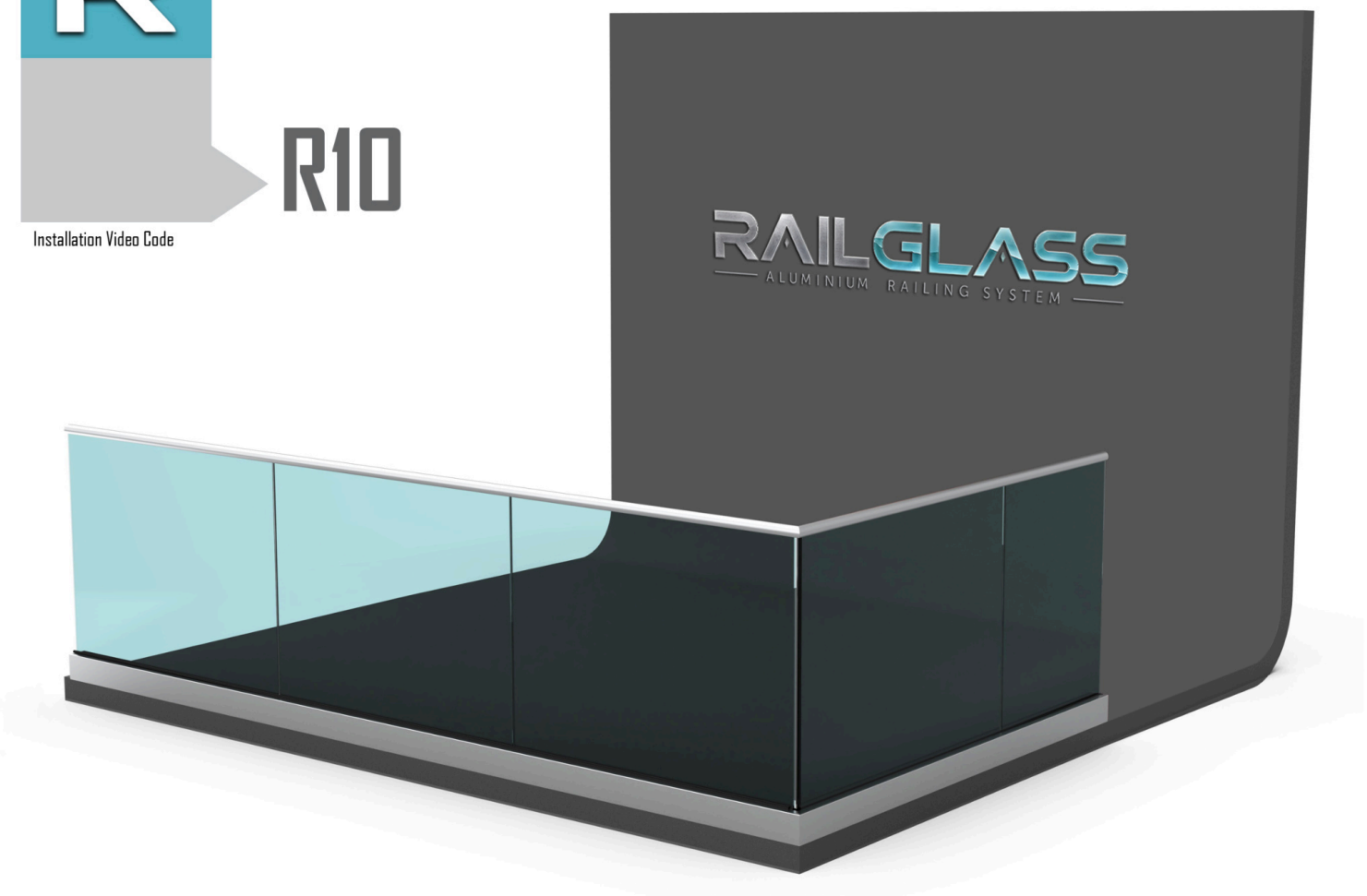

PRODUCT INFO

- **Glass Height Max 110 cm**
- **With 10+10+0,76/1,52 Glass, Weight Volume 300 kg/linear meter**
- **With 8+8+0,76/1,52 Glass, Weight Volume 300 kg/linear meter**
- **With 6+6+0,76/1,52 Glass, Weight Volume 300 kg/linear meter**
- **Availability for Partial Using (15 cm/20 cm)**
- **Easy Installation**
- **Anodize Finishing and RAL Colour Options**
- **Certificated System**

- Cam Yüksekliği Maksimum 110 cm
- 10+10+0,76/1,52 Cam ile, Ağırlık Hacmi 300 kg/lineer metre
- 8+8+0,76/1,52 Cam ile, Ağırlık Hacmi 300 kg/lineer metre
- 6+6+0,76/1,52 Cam ile, Ağırlık Hacmi 300 kg/lineer metre
- Kısmi Kullanıma Uygunluk (15 cm/20 cm)
- Kolay Montaj
- Eloksal Kaplama ve RAL Renk Seçenekleri
- Sertifikalı Sistem

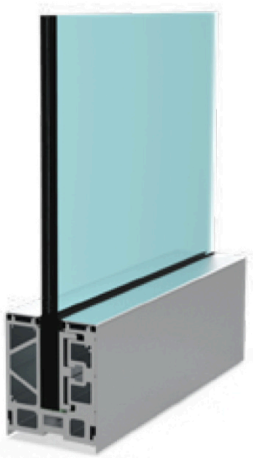



Testato/calcolato/certificato a livello internazionale:

THE GLASS BALUSTRADE

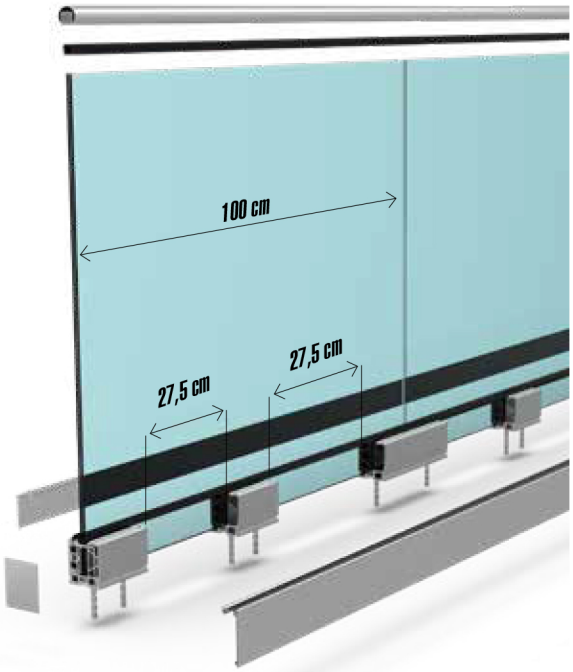

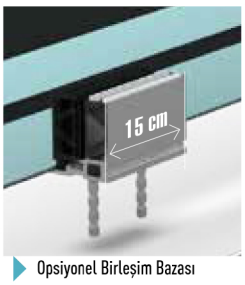

Opsiyonel Birleşim Bazası

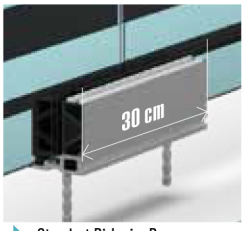

Standart Birleşim Bazası

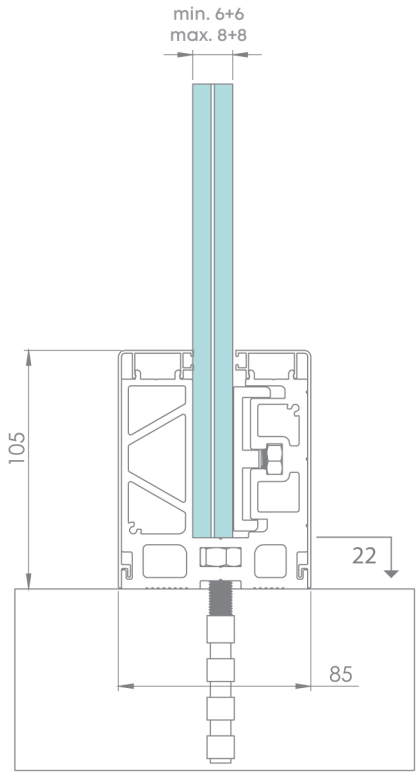

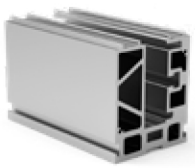

R10-01
Glass Base Set 15 cm
Cam Baza 15 cm



R10-02
Glass Base Set 30 cm
Cam Baza 30 cm



R10-03
Cover Profile
Kapak Profili

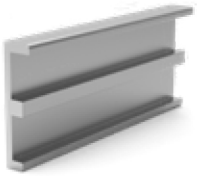

R10-04
Aluminium Compression
Alüminyum Sıkıştırma



R10-05
15 cm 90° Outer Corner
15 cm 90° Dış Köşe



R10-06
15 cm 90° Inner Corner
15 cm 90° İç Köşe



R10-07
Endcap 85x105
Bitiş Kapağı



R10-08
8 Metric Anchor 10-15 cm
8 Metrik Ankraj 10-15 cm



R10-09
Inox Bolt M8x25
Paslanmaz Cıvata M8x25

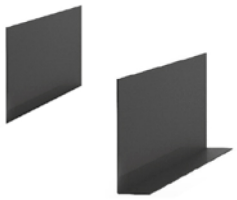

R10-10
Plastic Compression Set
Plastik Sıkıştırma Seti



R10-11
Rubber
Fitil

R20

Installation Video Code



PRODUCT INFO

- **Glass Height Max 110 cm**
- **With 10+10+0,76/1,52 Glass, Weight Volume 300 kg/linear meter**
- **With 8+8+0,76/1,52 Glass, Weight Volume 300 kg/linear meter**
- **With 6+6+0,76/1,52 Glass, Weight Volume 300 kg/linear meter**
- **Availability for Partial Using (15 cm/20 cm)**
- **Easy Installation**
- **Anodize Finishing and RAL Colour Options**
- **Certificated System**

- Cam Yüksekliği Maksimum 110 cm
- 10+10+0,76/1,52 Cam ile, Ağırlık Hacmi 300 kg/lineer metre
- 8+8+0,76/1,52 Cam ile, Ağırlık Hacmi 300 kg/lineer metre
- 6+6+0,76/1,52 Cam ile, Ağırlık Hacmi 300 kg/lineer metre
- Kısmi Kullanıma Uygunluk (15 cm/20 cm)
- Kolay Montaj
- Eloksal Kaplama ve RAL Renk Seçenekleri
- Sertifikalı Sistem

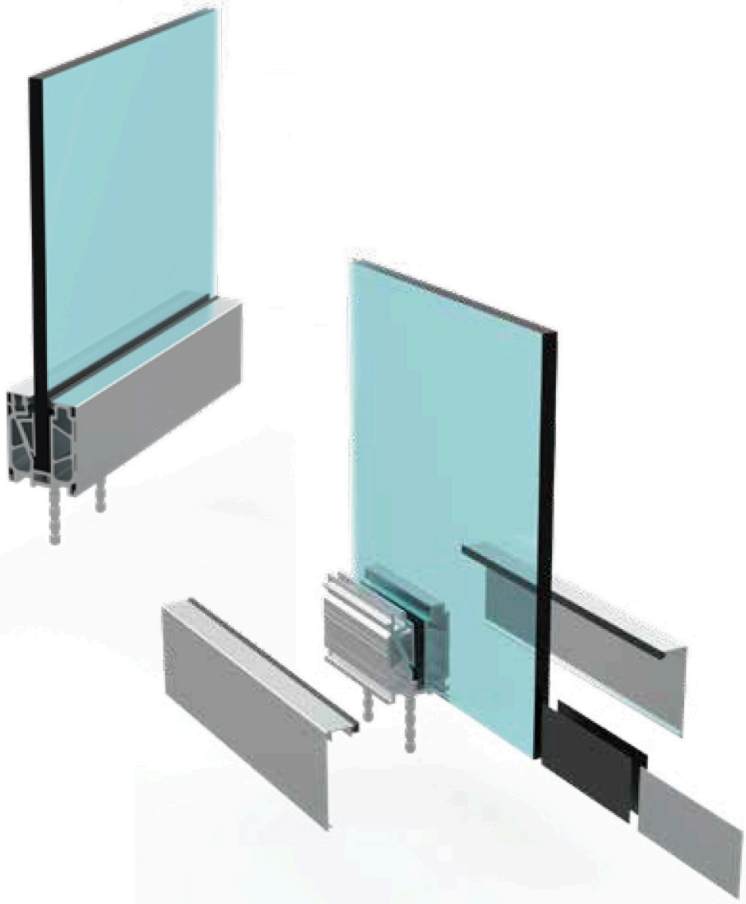

Testato/calcolato/certificato a livello internazionale:

THE GLASS BALUSTRADE

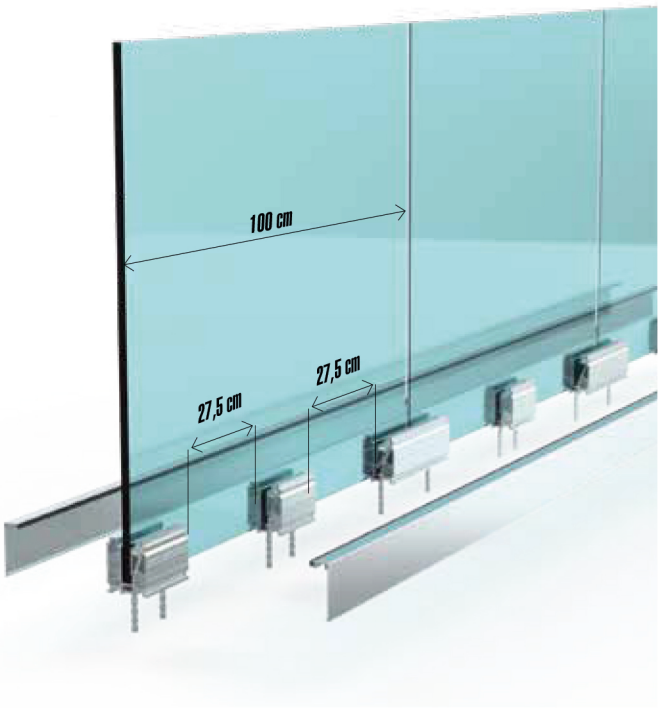



Opsiyonel Birleşim Bazası

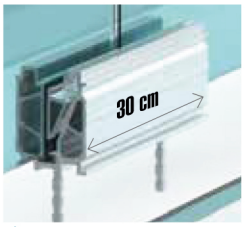

Standart Birleşim Bazası

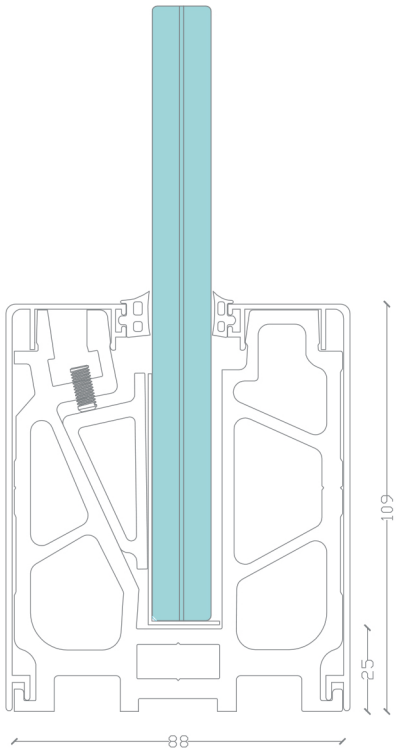

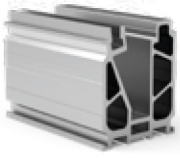

R20-01
Glass Base Set 15 cm
Cam Baza 15 cm

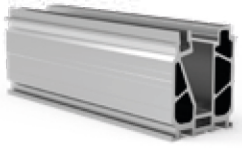

R20-02
Glass Base Set 30 cm
Cam Baza 30 cm



R20-03
Cover Profile
Kapak Profili



R20-04
Endcap 88x109
Bitiş Kapağı



R20-05
15 cm 90° Outer Corner
15 cm 90° Dış Köşe



R20-06
15 cm 90° Inner Corner
15 cm 90° İç Köşe

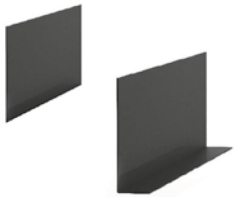

R20-07
Plastic Compression Set
Plastik Sıkıştırma Seti



R20-08
Rubber
Fitil



R20-09
8 Metric Anchor 10-15 cm
8 Metrik Ankraj 10-15 cm



R20-10
Inox Bolt M8x25
Paslanmaz Cıvata M8x25



R20-11
8 Metric Nut
8 Metrik Somun

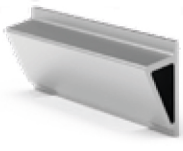

R20-12
Aluminium Compression
Alüminyum Sıkıştırma

R20-A

Installation Video Code



PRODUCT INFO

- **Glass Height Max 110 cm**
- **With 10+10+0,76/1,52 Glass, Weight Volume 300 kg/linear meter**
- **With 8+8+0,76/1,52 Glass, Weight Volume 300 kg/linear meter**
- **With 6+6+0,76/1,52 Glass, Weight Volume 300 kg/linear meter**
- **Availability for Partial Using (15 cm/20 cm)**
- **Easy Installation**
- **Anodize Finishing and RAL Colour Options**
- **Certificated System**

- Cam Yüksekliği Maksimum 110 cm
- 10+10+0,76/1,52 Cam ile, Ağırlık Hacmi 300 kg/lineer metre
- 8+8+0,76/1,52 Cam ile, Ağırlık Hacmi 300 kg/lineer metre
- 6+6+0,76/1,52 Cam ile, Ağırlık Hacmi 300 kg/lineer metre
- Kısmi Kullanıma Uygunluk (15 cm/20 cm)
- Kolay Montaj
- Eloksal Kaplama ve RAL Renk Seçenekleri
- Sertifikalı Sistem

Testato/calcolato/certificato a livello internazionale:





THE GLASS BALUSTRADE

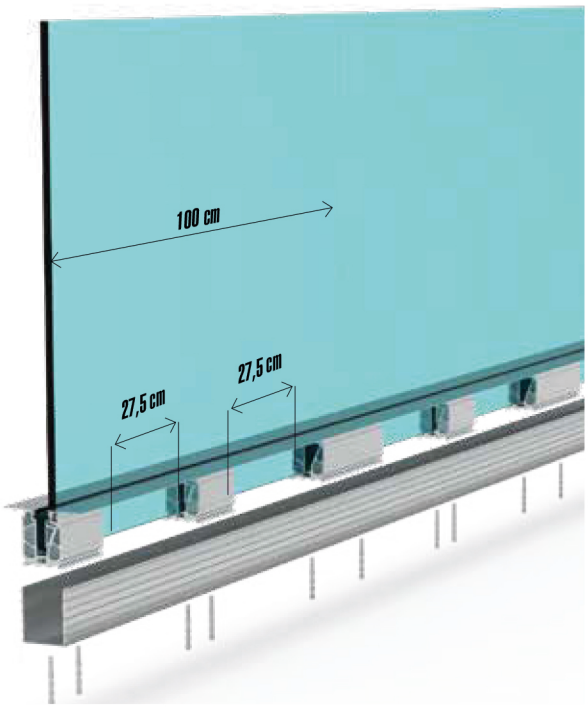



Opsiyonel Birleşim Bazası



Standart Birleşim Bazası

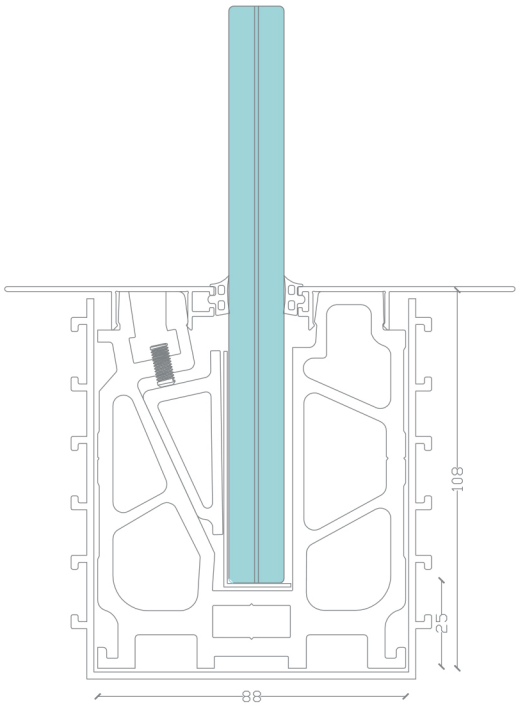

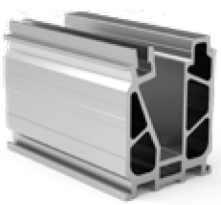

R20A-01
Glass Base Set 15 cm
Cam Baza 15 cm



R20A-02
Glass Base Set 30 cm
Cam Baza 30 cm

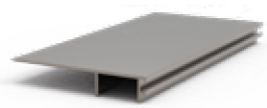

R20A-03
Cover Profile
Kapak Profili



R20A-04
Endcap 88x109
Bitiş Kapağı



R20A-05
U Case Profiles
U Kasa Profilleri



R20A-06
8 Metric Anchor 10-15 cm
8 Metrik Ankraj 10-15 cm



R20A-07
Inox Bolt M8x25
Paslanmaz Cıvata M8x25



R20A-08
Aluminium Compression
Alüminyum Sıkıştırma

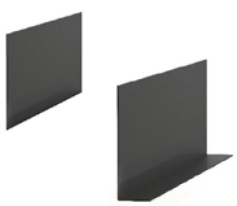

R20A-09
Plastic Compression Set
Plastik Sıkıştırma Seti



R20A-10
8 Metric Nut
8 Metrik Somun



R20A-11
Rubber
Fitil

R30

Installation Video Code



PRODUCT INFO

- **Glass Height Max 110 cm**
- **With 10+10+0,76/1,52 Glass, Weight Volume 300 kg/linear meter**
- **With 8+8+0,76/1,52 Glass, Weight Volume 300 kg/linear meter**
- **With 6+6+0,76/1,52 Glass, Weight Volume 300 kg/linear meter**
- **Availability for Partial Using (15 cm/20 cm)**
- **Easy Installation**
- **Anodize Finishing and RAL Colour Options**
- **Certificated System**

- Cam Yüksekliği Maksimum 110 cm
- 10+10+0,76/1,52 Cam ile, Ağırlık Hacmi 300 kg/lineer metre
- 8+8+0,76/1,52 Cam ile, Ağırlık Hacmi 300 kg/lineer metre
- 6+6+0,76/1,52 Cam ile, Ağırlık Hacmi 300 kg/lineer metre
- Kısmi Kullanıma Uygunluk (15 cm/20 cm)
- Kolay Montaj
- Eloksal Kaplama ve RAL Renk Seçenekleri
- Sertifikalı Sistem



Testato/calcolato/certificato a livello internazionale:

THE GLASS BALUSTRADE



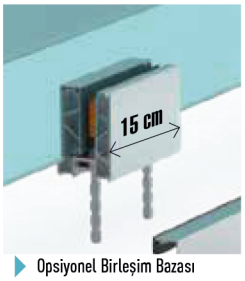

Opsiyonel Birleşim Bazası

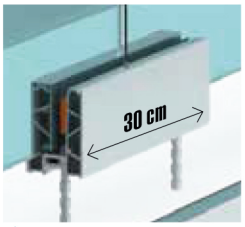

Standart Birleşim Bazası

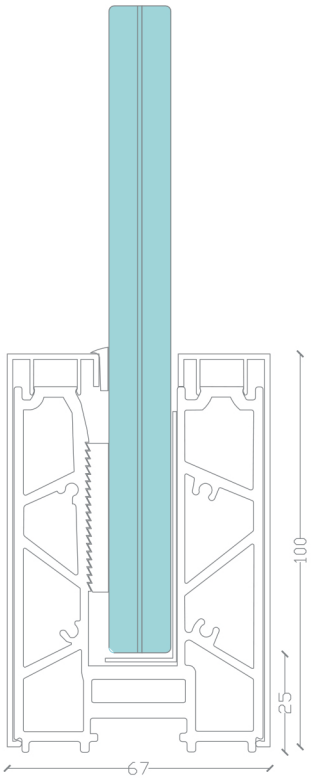



R30-01
Glass Base Set 15 cm
Cam Baza 15 cm

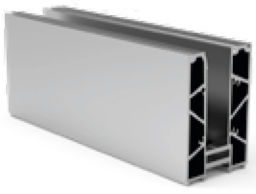

R30-02
Glass Base Set 30 cm
Cam Baza 30 cm



R30-03
Cover Profile
Kapak Profili



R30-04
Endcap 67x100
Bitiş Kapağı



R30-05
8 Metric Anchor 10-15 cm
8 Metrik Ankraj 10-15 cm



R30-06
Plastic Compression Set
Plastik Sıkıştırma Seti

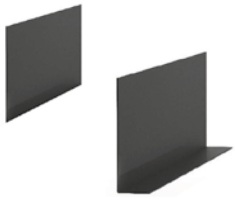

R30-07
Plastic Compression Set
Plastik Sıkıştırma Seti



R30-08
Rubber
Fitil

R40

Installation Video Code



PRODUCT INFO

- **Glass Height Max 110 cm**
- **With 10+10+0,76/1,52 Glass, Weight Volume 300 kg/linear meter**
- **With 8+8+0,76/1,52 Glass, Weight Volume 300 kg/linear meter**
- **With 6+6+0,76/1,52 Glass, Weight Volume 300 kg/linear meter**
- **Availability for Partial Using (15 cm/20 cm)**
- **Easy Installation**
- **Anodize Finishing and RAL Colour Options**
- **Certificated System**

- Cam Yüksekliği Maksimum 110 cm
- 10+10+0,76/1,52 Cam ile, Ağırlık Hacmi 300 kg/lineer metre
- 8+8+0,76/1,52 Cam ile, Ağırlık Hacmi 300 kg/lineer metre
- 6+6+0,76/1,52 Cam ile, Ağırlık Hacmi 300 kg/lineer metre
- Kısmi Kullanıma Uygunluk (15 cm/20 cm)
- Kolay Montaj
- Eloksal Kaplama ve RAL Renk Seçenekleri
- Sertifikalı Sistem

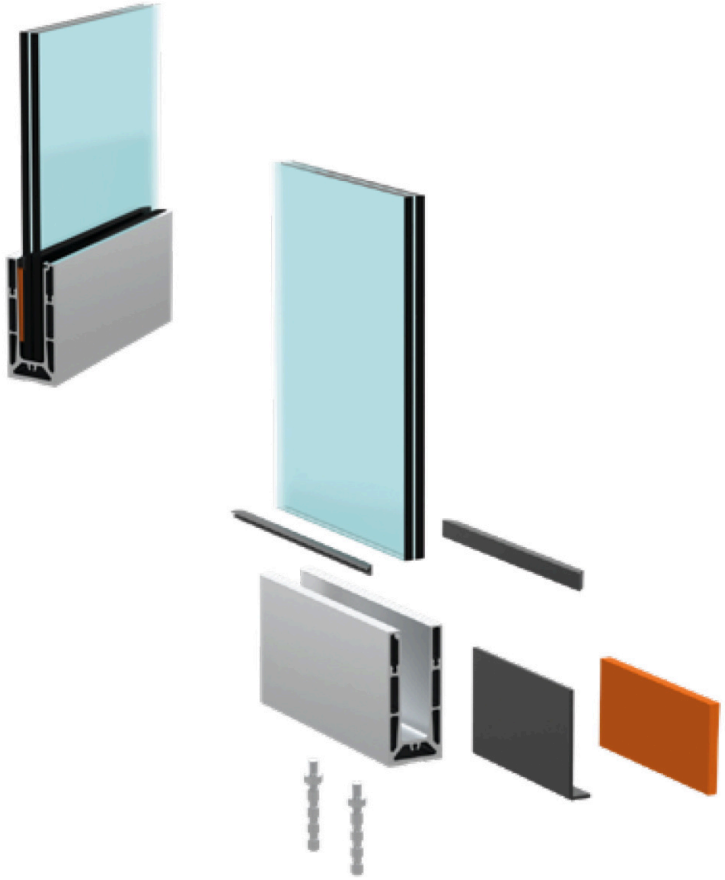

Testato/calcolato/certificato a livello internazionale:

THE GLASS BALUSTRADE

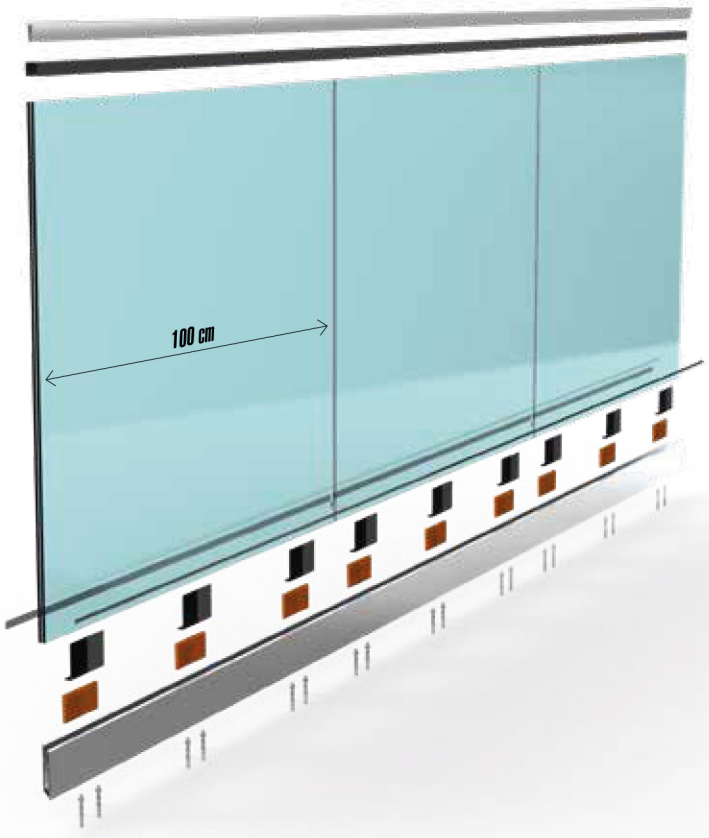

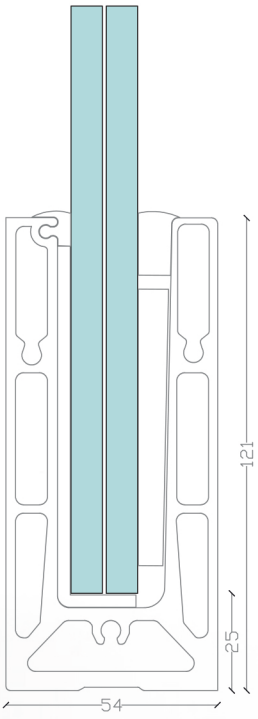



R40-01
Glass Base Set 600 cm
Cam Baza 600 cm

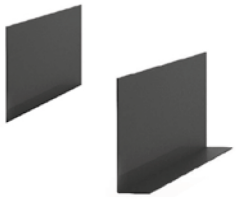

R40-02
Plastic Compression Set
Plastik Sıkıştırma Seti



R40-03
Endcap 67x100
Bitiş Kapağı



R40-04
8 Metric Anchor 10-15 cm
8 Metrik Ankraj 10-15 cm

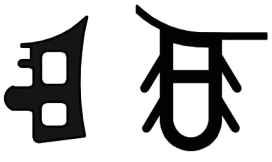

R40-05
Rubber
Fitil



R40-06
Plastic Compression Set
Plastik Sıkıştırma Seti

R40-X

Installation Video Code



PRODUCT INFO

- **Glass Height Max 110 cm**
- **With 10+10+0,76/1,52 Glass, Weight Volume 300 kg/linear meter**
- **With 8+8+0,76/1,52 Glass, Weight Volume 300 kg/linear meter**
- **With 6+6+0,76/1,52 Glass, Weight Volume 300 kg/linear meter**
- **Availability for Partial Using (15 cm/20 cm)**
- **Easy Installation**
- **Anodize Finishing and RAL Colour Options**
- **Certificated System**

- Cam Yüksekliği Maksimum 110 cm
- 10+10+0,76/1,52 Cam ile, Ağırlık Hacmi 300 kg/lineer metre
- 8+8+0,76/1,52 Cam ile, Ağırlık Hacmi 300 kg/lineer metre
- 6+6+0,76/1,52 Cam ile, Ağırlık Hacmi 300 kg/lineer metre
- Kısmi Kullanıma Uygunluk (15 cm/20 cm)
- Kolay Montaj
- Eloksal Kaplama ve RAL Renk Seçenekleri
- Sertifikalı Sistem



Testato/calcolato/certificato a livello internazionale:

THE GLASS BALUSTRADE

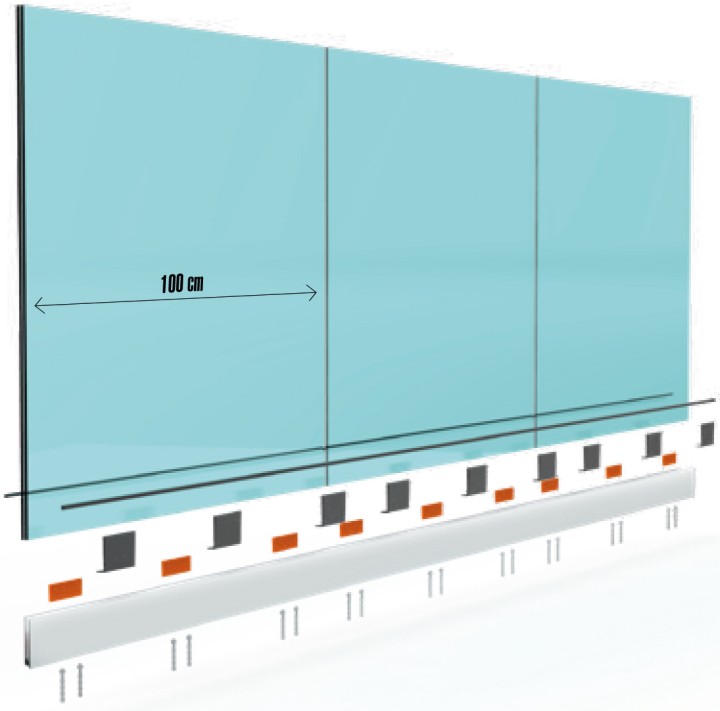

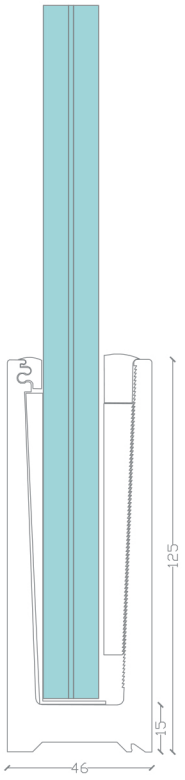



R40-X-01
Glass Base Set 600 cm
Cam Baza 600 cm

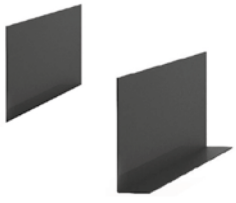

R40-X-02
Plastic Compression Set
Plastik Sıkıştırma Seti



R40-X-03
Endcap 46x125
Bitiş Kapağı



R40-X-04
8 Metric Anchor 10-15 cm
8 Metrik Ankraj 10-15 cm



R40-X-05
Rubber
Fitil



R40-X-06
Plastic Compression Set
Plastik Sıkıştırma Seti

R50

Installation Video Code



PRODUCT INFO

- **Glass Height Max 110 cm**
- **With 10+10+0,76/1,52 Glass, Weight Volume 300 kg/linear meter**
- **With 8+8+0,76/1,52 Glass, Weight Volume 300 kg/linear meter**
- **With 6+6+0,76/1,52 Glass, Weight Volume 300 kg/linear meter**
- **Availability for Partial Using (15 cm/20 cm)**
- **Easy Installation**
- **Anodize Finishing and RAL Colour Options**
- **Certificated System**

- Cam Yüksekliği Maksimum 110 cm
- 10+10+0,76/1,52 Cam ile, Ağırlık Hacmi 300 kg/lineer metre
- 8+8+0,76/1,52 Cam ile, Ağırlık Hacmi 300 kg/lineer metre
- 6+6+0,76/1,52 Cam ile, Ağırlık Hacmi 300 kg/lineer metre
- Kısmi Kullanıma Uygunluk (15 cm/20 cm)
- Kolay Montaj
- Eloksal Kaplama ve RAL Renk Seçenekleri
- Sertifikalı Sistem



Testato/calcolato/certificato a livello internazionale:

GOEDKEURING VOLGENS BOUWBESLUIT EN1991 | GOEDKEURING VOLGENS BOUWBESLUIT EN1990 | NEN 2608 | STATISCHE BEREKENUNG DIN18008 | AbP | SIA 261:2014 | BS6180 APPROVED | Tested at WTCB & CSTC | NBN B03-004 | Applus | CTE | AVIS TECHNIQUE

THE GLASS BALUSTRADE



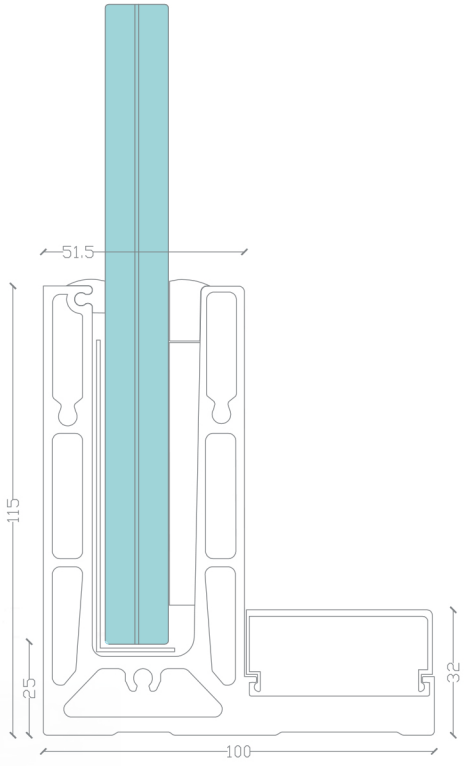

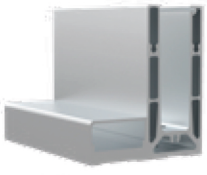

R50-01
Glass Base Set 600 cm
Cam Baza 600 cm

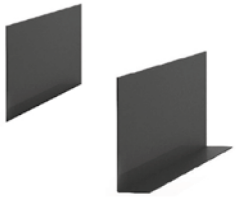

R50-02
Plastic Compression Set
Plastik Sıkıştırma Seti

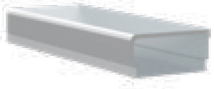

R50-03
Profile
Profil



R50-04
8 Metric Anchor 10-15 cm
8 Metrik Ankraj 10-15 cm



R50-05
Rubber
Fitil



R50-06
Plastic Compression Set
Plastik Sıkıştırma Seti



R50-07
Endcap 100x115
Bitiş Kapağı

R60

Installation Video Code



PRODUCT INFO

- **Glass Height Max 110 cm**
- **With 10+10+0,76/1,52 Glass, Weight Volume 300 kg/linear meter**
- **With 8+8+0,76/1,52 Glass, Weight Volume 300 kg/linear meter**
- **With 6+6+0,76/1,52 Glass, Weight Volume 300 kg/linear meter**
- **Availability for Partial Using (15 cm/20 cm)**
- **Easy Installation**
- **Anodize Finishing and RAL Colour Options**
- **Certificated System**

- Cam Yüksekliği Maksimum 110 cm
- 10+10+0,76/1,52 Cam ile, Ağırlık Hacmi 300 kg/lineer metre
- 8+8+0,76/1,52 Cam ile, Ağırlık Hacmi 300 kg/lineer metre
- 6+6+0,76/1,52 Cam ile, Ağırlık Hacmi 300 kg/lineer metre
- Kısmi Kullanıma Uygunluk (15 cm/20 cm)
- Kolay Montaj
- Eloksal Kaplama ve RAL Renk Seçenekleri
- Sertifikalı Sistem





Testato/calcolato/certificato a livello internazionale:

GOEDKEURING VOLGENS BOUWBESLUIT EN1991 | GOEDKEURING VOLGENS BOUWBESLUIT EN1990 | NEN 2608 | STATISCHE BERECHNUNG DIN18008 | AbP | SIA 261:2014 | BS6180 APPROVED | Tested at WTCB & CSTC | NBN B03-004 | Applus | CTE | AVIS TECHNIQUE

THE GLASS BALUSTRADE

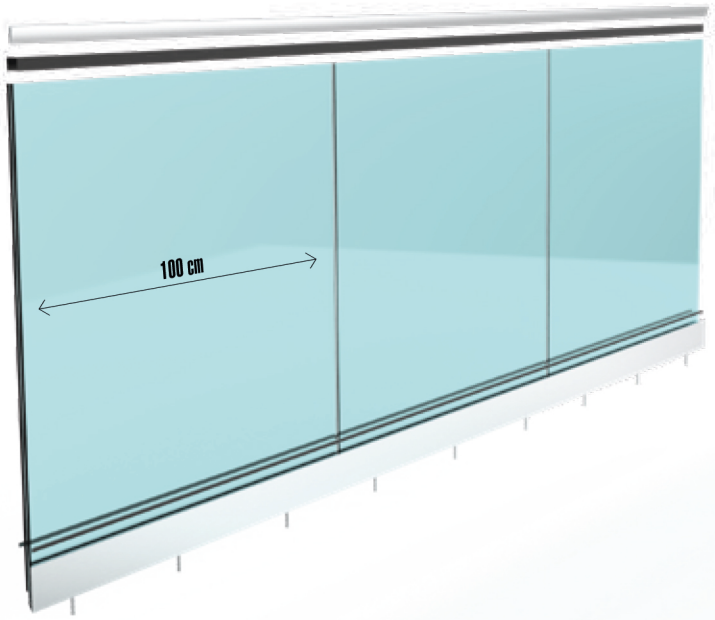

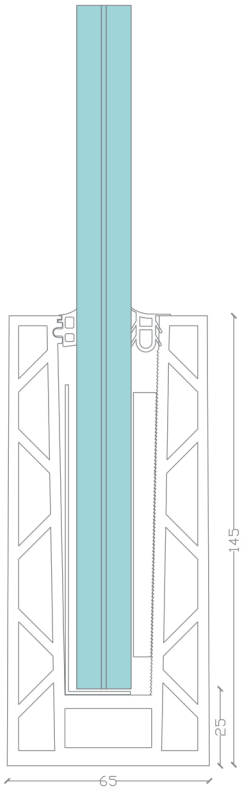

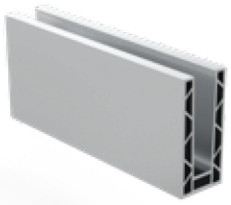

R60-01
Glass Base Set 600 cm
Cam Baza 600 cm

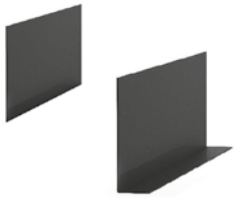

R60-02
Plastic Compression Set
Plastik Sıkıştırma Seti



R60-03
Endcap 65x145
Bitiş Kapağı



R60-04
8 Metric Anchor 10-15 cm
8 Metrik Ankraj 10-15 cm

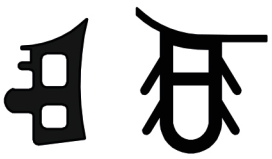

R60-05
Rubber
Fitil



R60-06
Plastic Compression Set
Plastik Sıkıştırma Seti

R70

Installation Video Code

RAILGLASS
ALUMINIUM RAILING SYSTEM

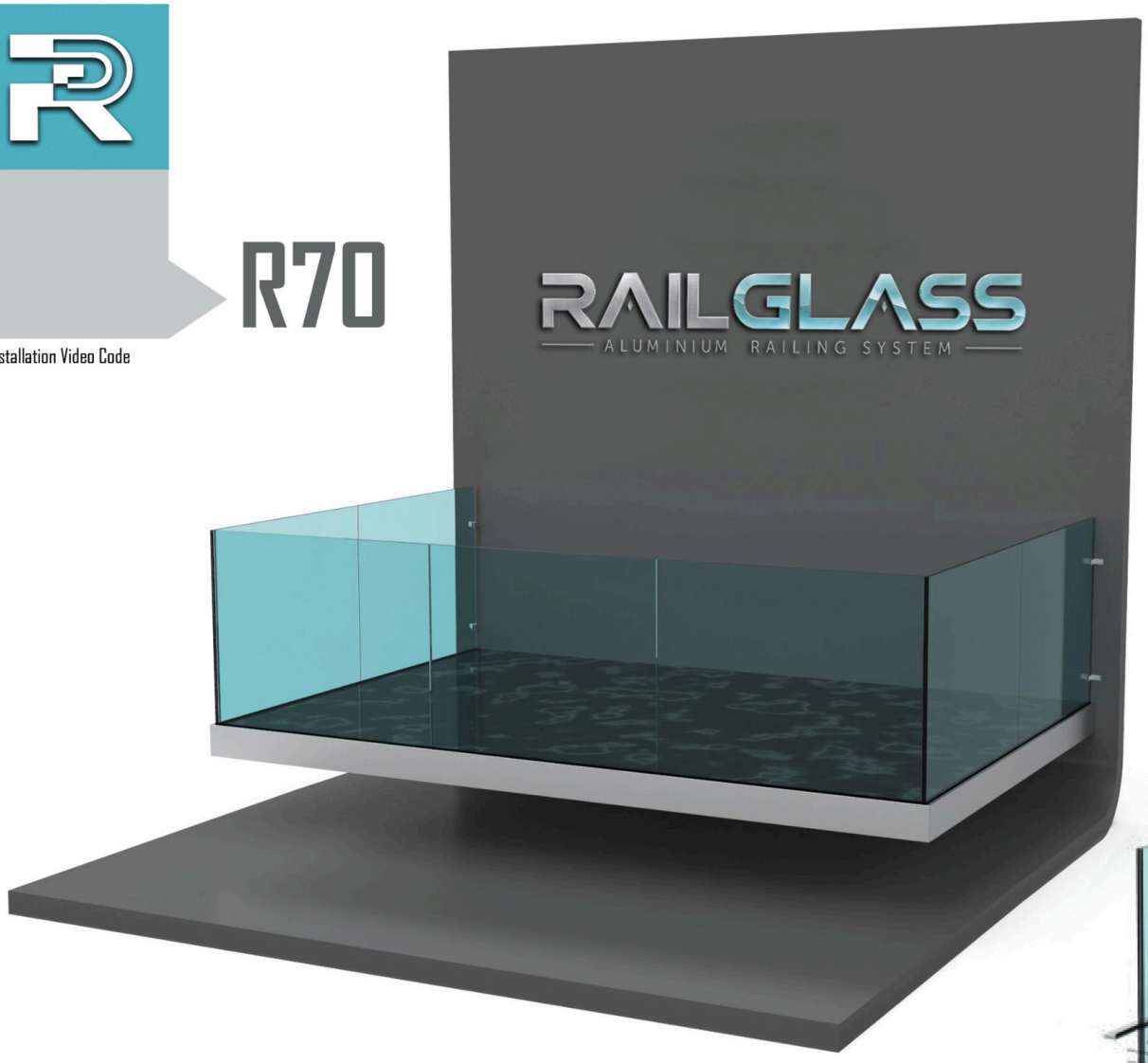



PRODUCT INFO

- **Glass Height Max 110 cm**
- **With 10+10+0,76/1,52 Glass, Weight Volume 300 kg/linear meter**
- **With 8+8+0,76/1,52 Glass, Weight Volume 300 kg/linear meter**
- **With 6+6+0,76/1,52 Glass, Weight Volume 300 kg/linear meter**
- **Availability for Partial Using (15 cm/20 cm)**
- **Easy Installation**
- **Anodize Finishing and RAL Colour Options**
- **Certificated System**

- Cam Yüksekliği Maksimum 110 cm
- 10+10+0,76/1,52 Cam ile, Ağırlık Hacmi 300 kg/lineer metre
- 8+8+0,76/1,52 Cam ile, Ağırlık Hacmi 300 kg/lineer metre
- 6+6+0,76/1,52 Cam ile, Ağırlık Hacmi 300 kg/lineer metre
- Kısmi Kullanıma Uygunluk (15 cm/20 cm)
- Kolay Montaj
- Eloksal Kaplama ve RAL Renk Seçenekleri
- Sertifikalı Sistem



Testato/calcolato/certificato a livel [redacted] le:

THE GLASS BALUSTRADE



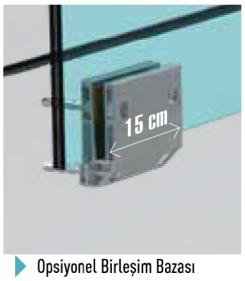

Opsiyonel Birleşim Bazası

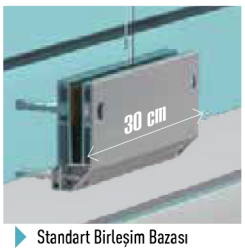

Standart Birleşim Bazası

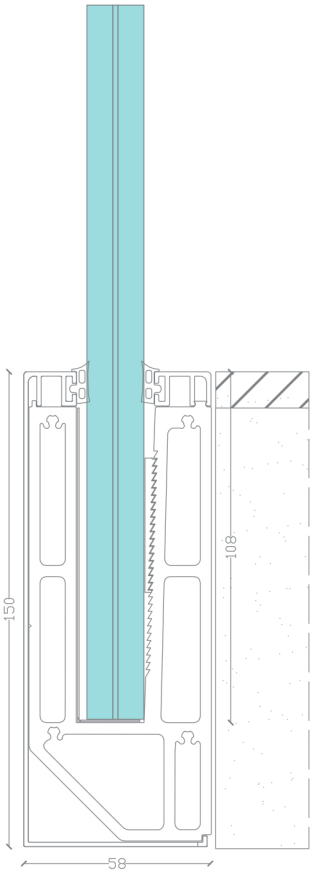



R70-01
Glass Base Set 15 cm
Cam Baza 15 cm



R70-02
Glass Base Set 30 cm
Cam Baza 30 cm



R70-03
Cover Profile
Kapak Profili

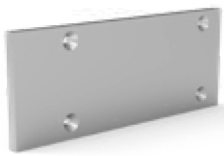

R70-04
Endcap 58x109
Bitiş Kapağı



R70-05
Cover Profile
Kapak Profili



R70-06
8 Metric Anchor 10-15 cm
8 Metrik Ankraj 10-15 cm



R70-07
Plastic Compression Set
Plastik Sıkıştırma Seti

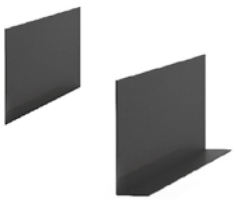

R70-08
Plastic Compression Set
Plastik Sıkıştırma Seti



R70-09
Rubber
Fitil

R80

Installation Video Code



PRODUCT INFO

- **Glass Height Max 110 cm**
- **With 6+6+0,76/1,52 Glass, Weight Volume 300 kg/linear meter**
- **With 5+5+0,76/1,52 Glass, Weight Volume 300 kg/linear meter**
- **With 4+4+0,76/1,52 Glass, Weight Volume 300 kg/linear meter**
- **Availability for Partial Using (15 cm/20 cm)**
- **Easy Installation**
- **Anodize Finishing and RAL Colour Options**
- **Certificated System**

- Cam Yüksekliği Maksimum 110 cm
- 10+10+0,76/1,52 Cam ile, Ağırlık Hacmi 300 kg/lineer metre
- 8+8+0,76/1,52 Cam ile, Ağırlık Hacmi 300 kg/lineer metre
- 6+6+0,76/1,52 Cam ile, Ağırlık Hacmi 300 kg/lineer metre
- Kısmi Kullanıma Uygunluk (15 cm/20 cm)
- Kolay Montaj
- Eloksal Kaplama ve RAL Renk Seçenekleri
- Sertifikalı Sistem

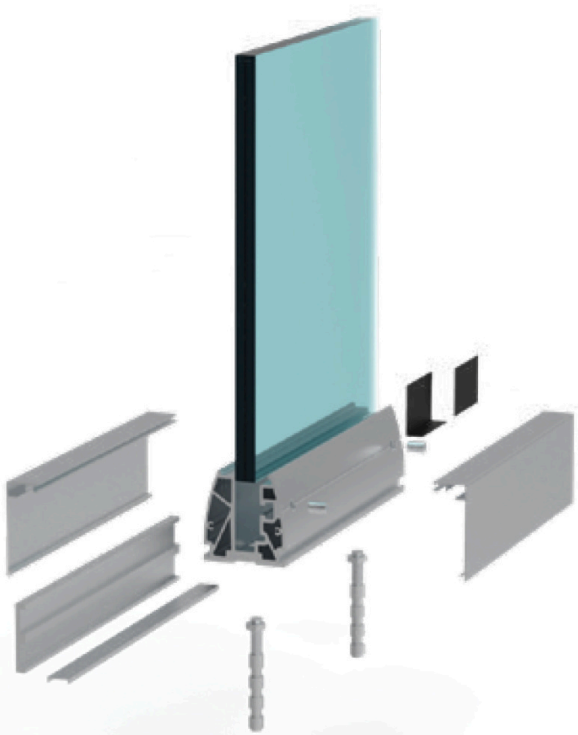

Testato/calcolato/certificato a livello internazionale:

THE GLASS BALUSTRADE



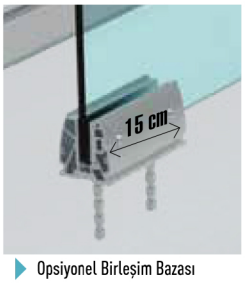

Opsiyonel Birleşim Bazası

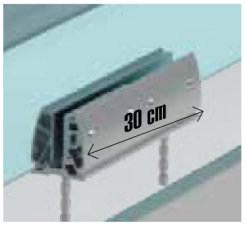

Standart Birleşim Bazası

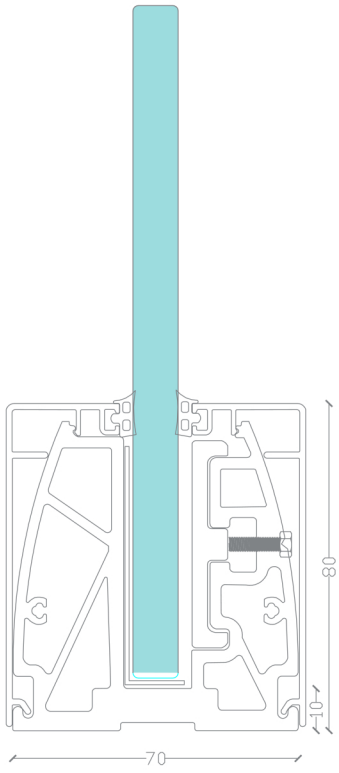



R80-01
Glass Base Set 15 cm
Cam Baza 15 cm



R80-02
Glass Base Set 30 cm
Cam Baza 30 cm



R80-03
Cover Profile
Kapak Profili



R80-04
Endcap 70x80
Bitiş Kapağı

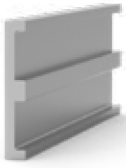

R80-05
Aluminium Compression
Alüminyum Sıkıştırma



R80-06
8 Metric Anchor 10-15 cm
8 Metrik Ankraj 10-15 cm



R80-07
Inox Bolt M8x25
Paslanmaz Cıvata M8x25

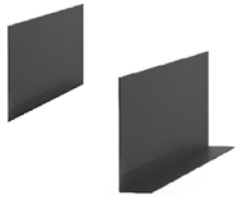

R80-08
Plastic Compression Set
Plastik Sıkıştırma Seti



R80-09
Rubber
Fitil



R80-10
8 Metric Nut
8 Metrik Somun

color scale
Renk Skalası



for more color options RAL code

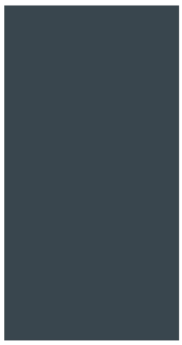

RAL Code: 7016

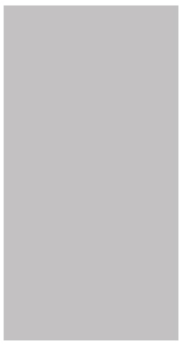

RAL Code: 7034

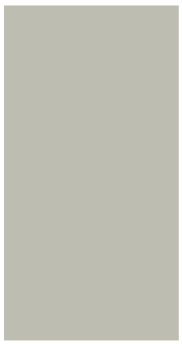

RAL Code: 7044

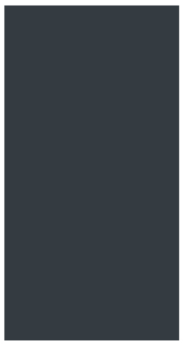

RAL Code: 7021



RAL Code: 9005

RAL Code: 9016



RAL Code: 9006

RAL Code: 9010

RAL Code: 9001



RAL Code: 7016
Fine Texture



RAL Code: 7016
Oknoplast Craftwood



RAL Code: 1035



RAL Code: 8007



RAL Code: 7039

RAILGLASS
ALUMINIUM RAILING SYSTEM



YOU CAN FOLLOW US ON OUR WEBSITE AND SOCIAL MEDIA

We have updated our website and social media platforms to make things easier for you with installation videos for our products. We continue to improve ourselves to provide you with better service. Your questions, requests, and feedback are very valuable to us! Please follow us for more.

Ürünlerimizin kurulum videolarıyla işlerinizi kolaylaştırmak için sitemizi ve sosyal medya platformlarımızı yeniledik. Sizlere daha iyi hizmet sunmak adına kendimizi geliştirmeye devam ediyoruz. Soru, istek ve önerileriniz bizim için çok değerli! Daha fazlası için lütfen bizi takip edin.

railglass.com.tr

R100

Installation Video Code

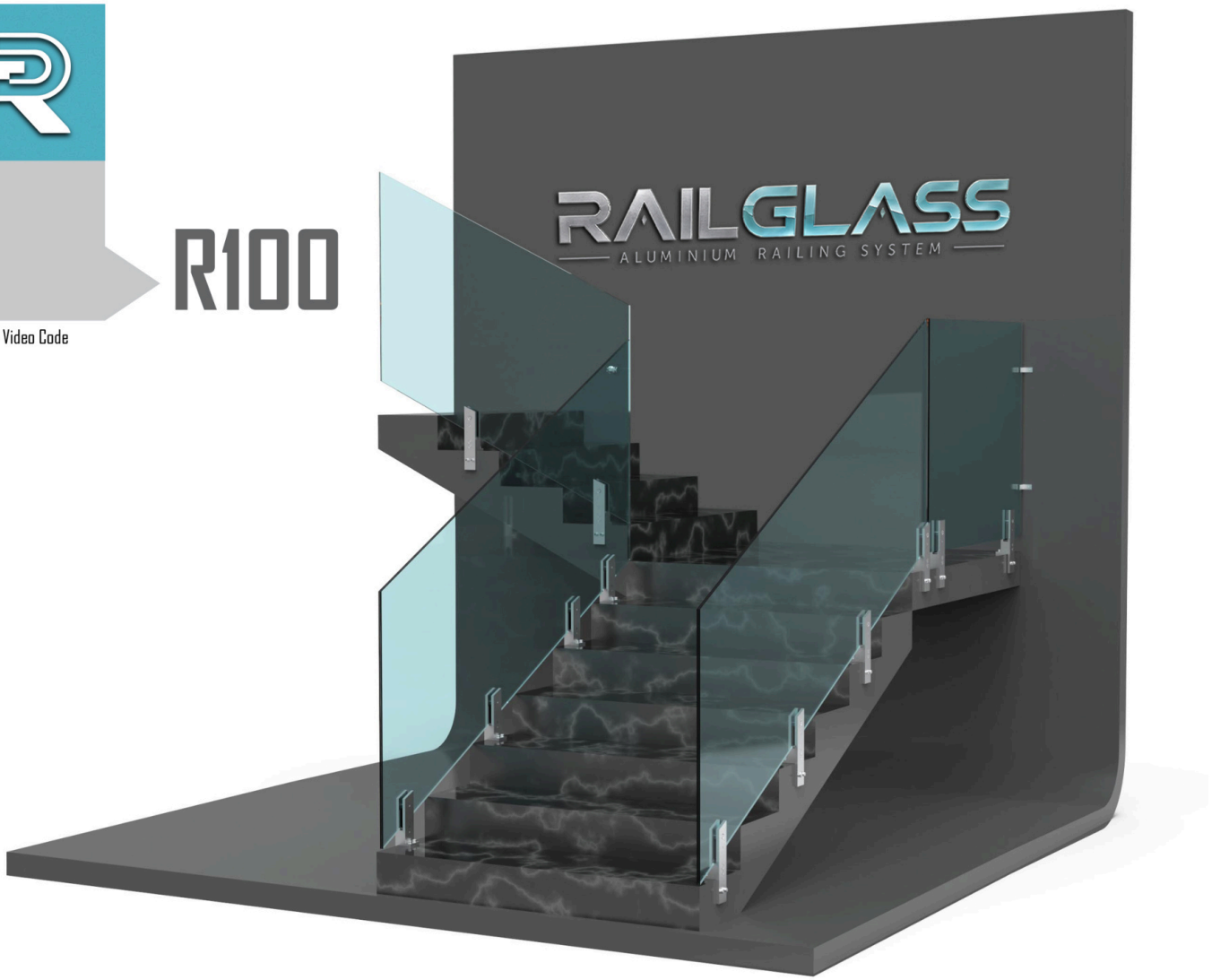

PRODUCT INFO

- **Glass Height Max 110 cm**
- **With 8+8+0,76/1,52 Glass, Weight Volume 300 kg/linear meter**
- **With 6+6+0,76/1,52 Glass, Weight Volume 300 kg/linear meter**
- **Availability for Partial Using (15 cm/20 cm)**
- **Easy Installation**
- **Anodize Finishing and RAL Colour Options**
- **Certificated System**

- Cam Yüksekliği Maksimum 110 cm
- 8+8+0,76/1,52 Cam ile, Ağırlık Hacmi 300 kg/lineer metre
- 6+6+0,76/1,52 Cam ile, Ağırlık Hacmi 300 kg/lineer metre
- Kısmi Kullanıma Uygunluk (15 cm/20 cm)
- Kolay Montaj
- Eloksal Kaplama ve RAL Renk Seçenekleri
- Sertifikalı Sistem

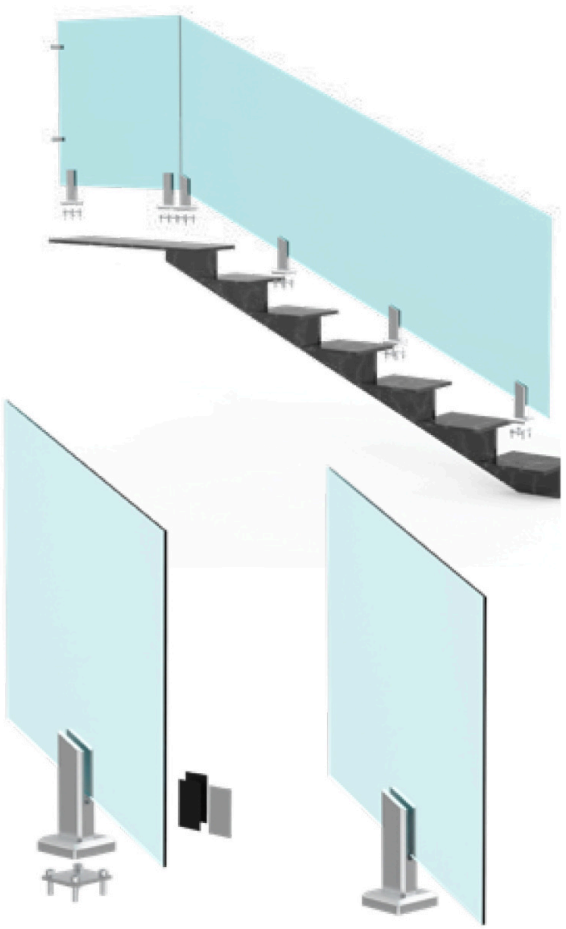

Testato/calcolato/certificato a livello internazionale:

GLASS FLOOR HOLDER

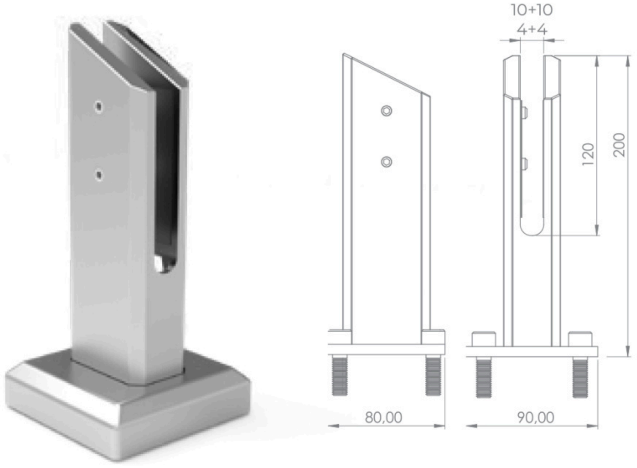

R101
Glass Holder 20 cm
Cam Tutucu 20 cm

Installation
Video Code

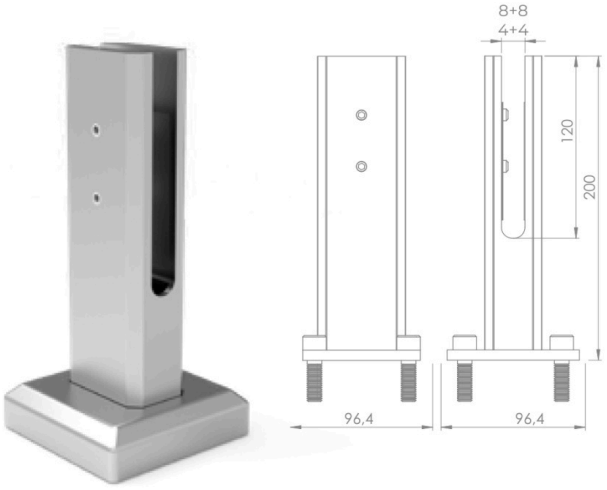

R102
Glass Holder 20 cm
Cam Tutucu 20 cm

Installation
Video Code

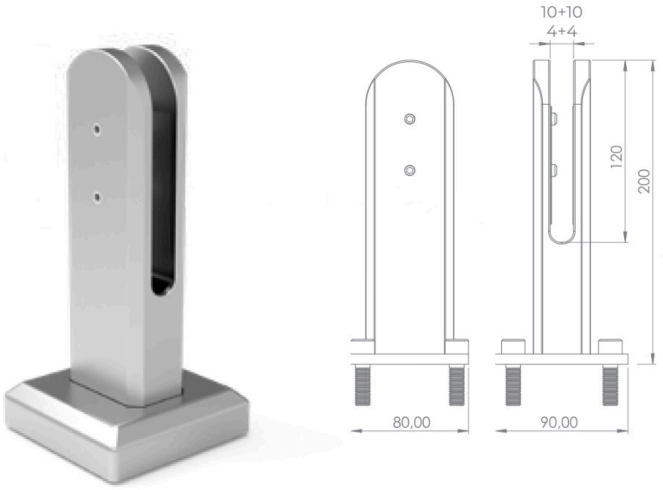

R103
Glass Holder 20 cm
Cam Tutucu 20 cm

Installation
Video Code

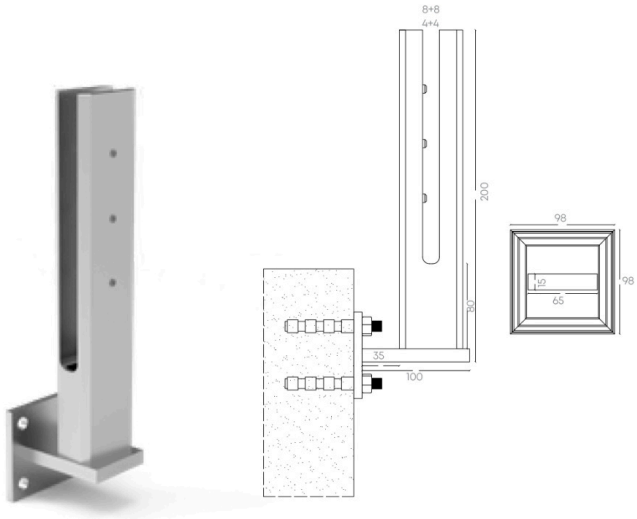

R104
Glass Holder 20 cm
Cam Tutucu 20 cm

Installation
Video Code

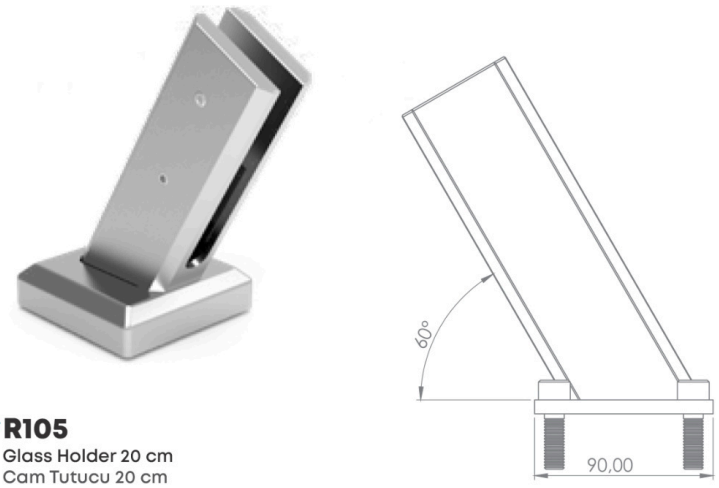

R105
Glass Holder 20 cm
Cam Tutucu 20 cm

Installation
Video Code

EXCELLENCE FROM ALL POINTS OF VIEW

HER AÇIDAN MÜKEMMELLİK

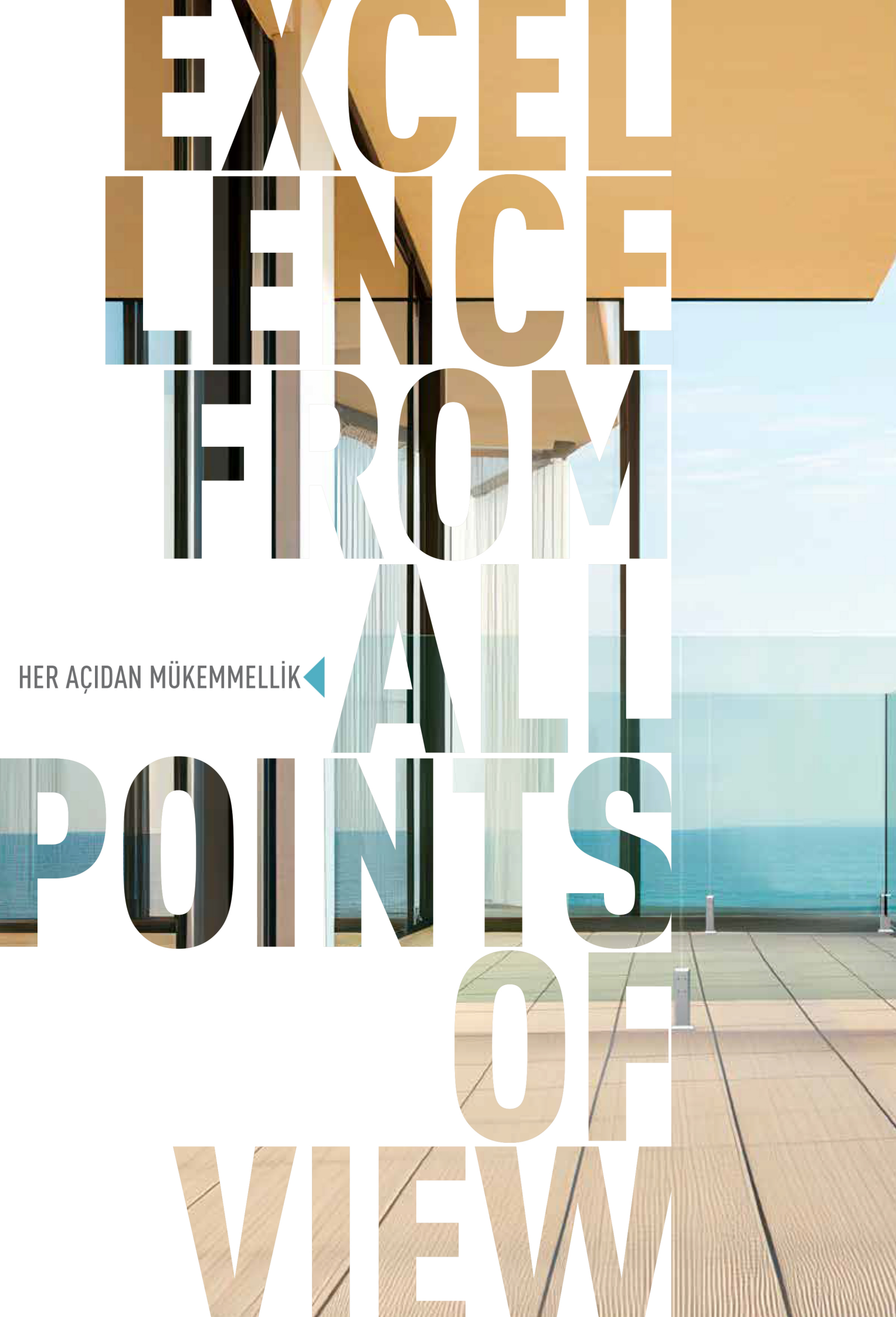



R150

Installation Video Code

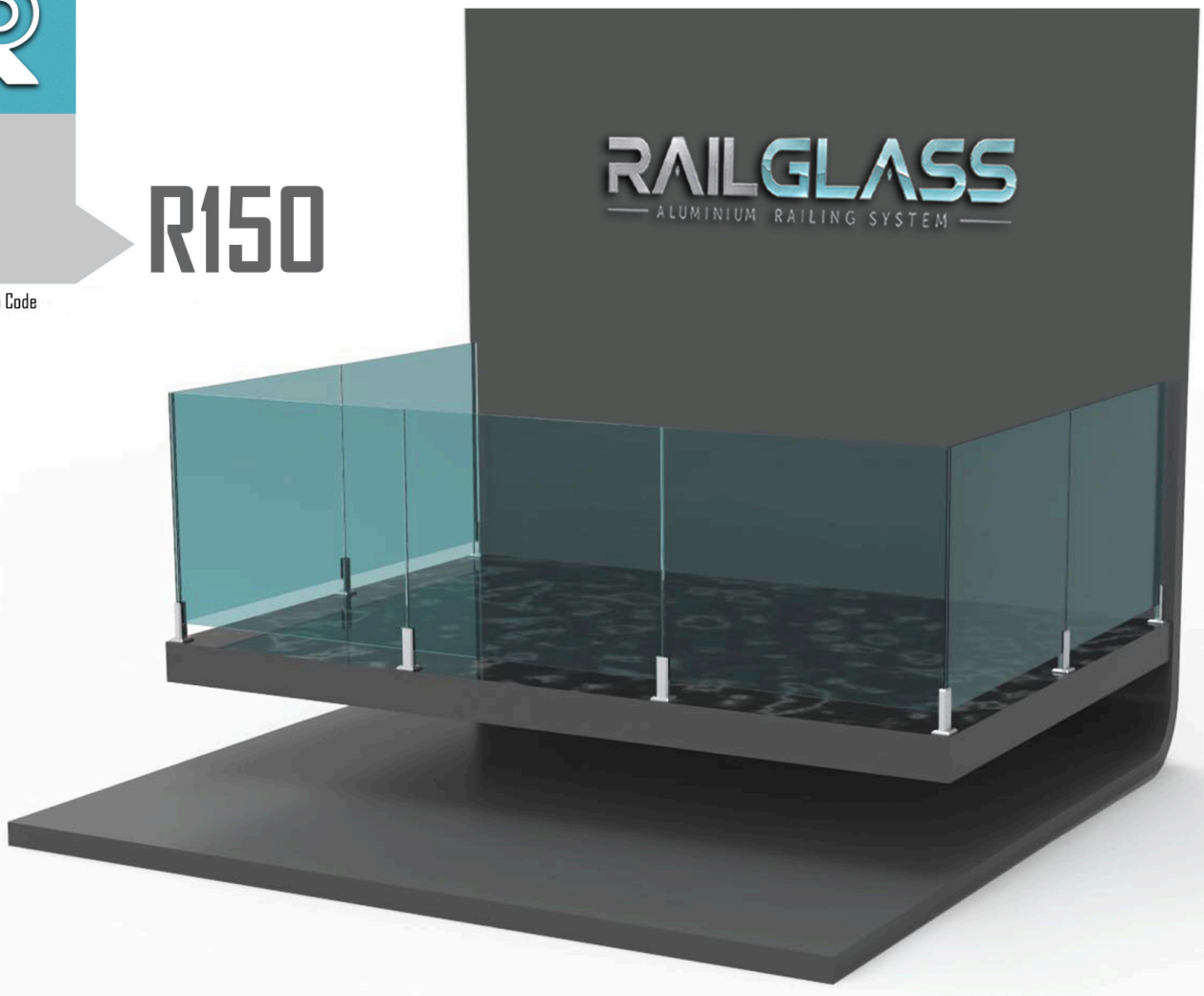

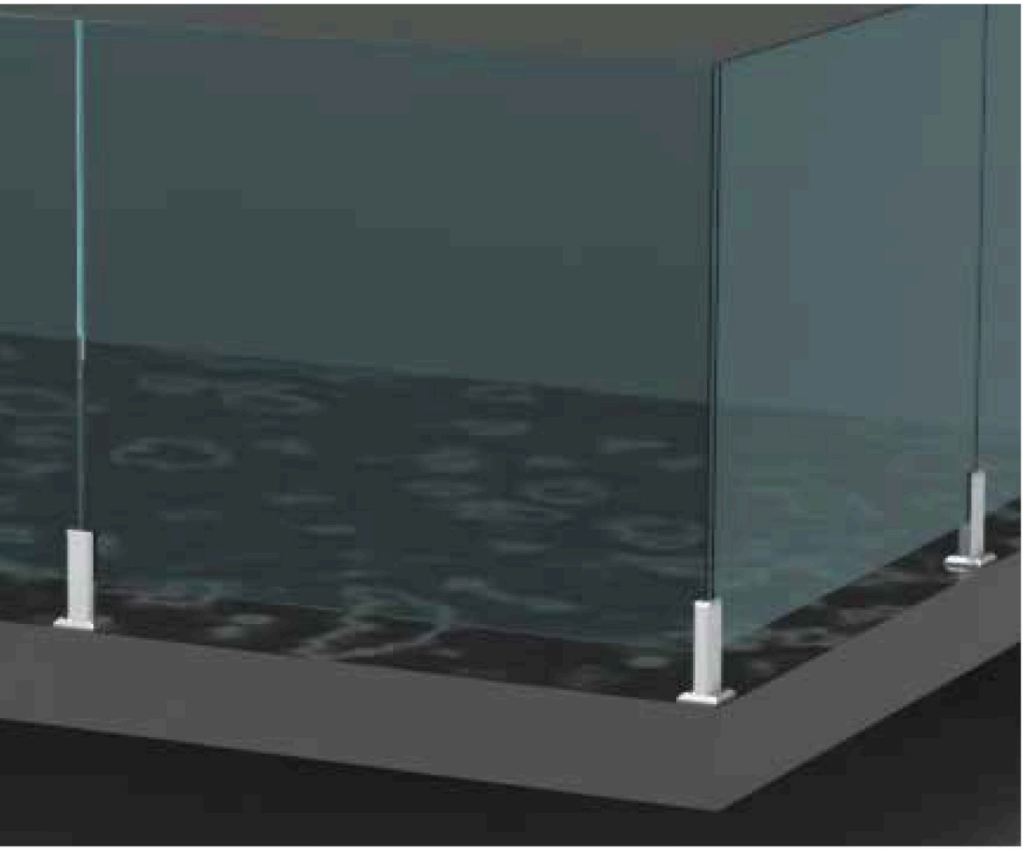

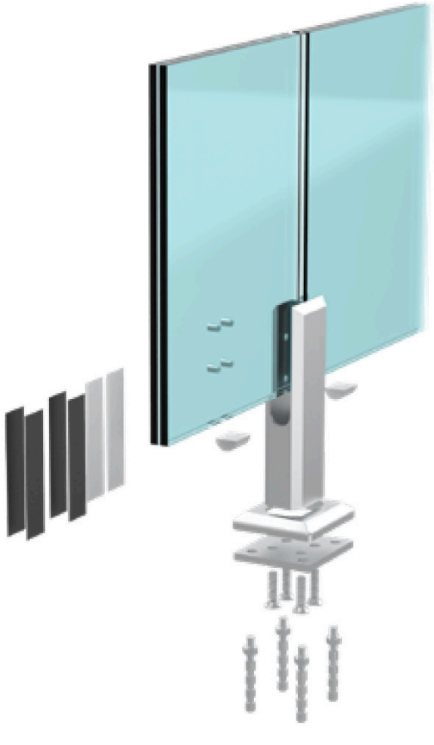

GLASS FLOOR HOLDER

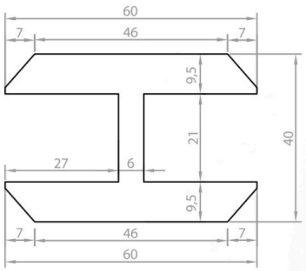



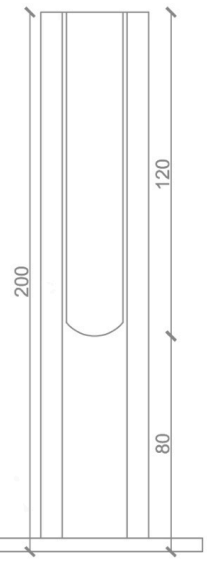

Installation
Video Code

R151
Glass Holder H 20 cm
Cam Tutucu H 20 cm

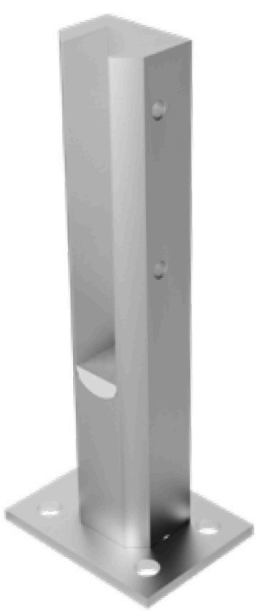

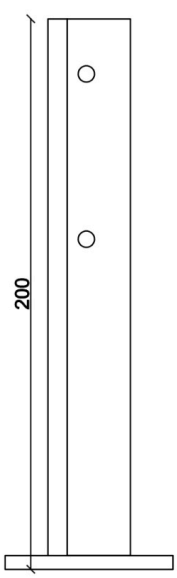

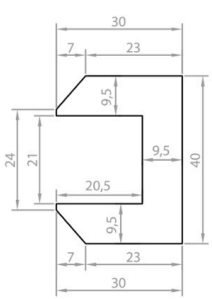

R152
Glass Holder U 20 cm
Cam Tutucu U 20 cm

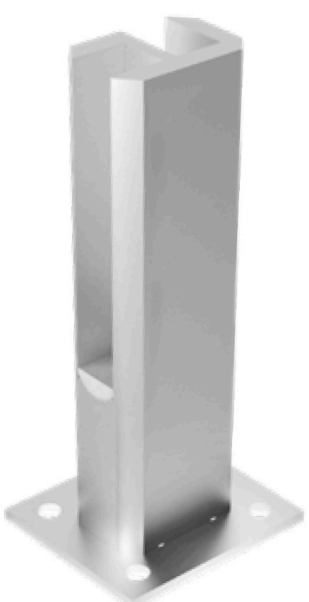

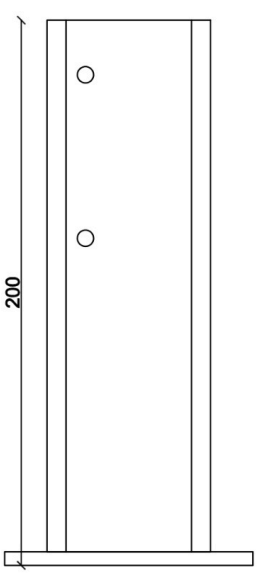

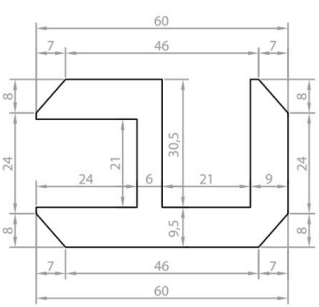

R153
Glass Holder Corner 20 cm
Cam Tutucu Köşe 20 cm

R200

Installation Video Code



PRODUCT INFO

- **Glass Height Max 110 cm**
- **With 8+8+0,76/1,52 Glass, Weight Volume 300 kg/linear meter**
- **With 6+6+0,76/1,52 Glass, Weight Volume 300 kg/linear meter**
- **Availability for Partial Using (15 cm/20 cm)**
- **Easy Installation**
- **Anodize Finishing and RAL Colour Options**
- **Certificated System**

- Cam Yüksekliği Maksimum 110 cm
- 8+8+0,76/1,52 Cam ile, Ağırlık Hacmi 300 kg/lineer metre
- 6+6+0,76/1,52 Cam ile, Ağırlık Hacmi 300 kg/lineer metre
- Kısmi Kullanıma Uygunluk (15 cm/20 cm)
- Kolay Montaj
- Eloksal Kaplama ve RAL Renk Seçenekleri
- Sertifikalı Sistem





Testato/calcolato/certificato a livello internazionale:

GOEDKEURING VOLGENS BOUWBESLUIT EN1991 | GOEDKEURING VOLGENS BOUWBESLUIT EN1990 | NEN 2608 | STATISCHE BERECHNUNG DIN18008 | AbP | SIA 261:2014 | BS6180 APPROVED | Tested at WTCB.be & CSTC.be | NBN B03-004 | Applus | CTE | AVIS TECHNIQUE

GLASS FLOOR HOLDER

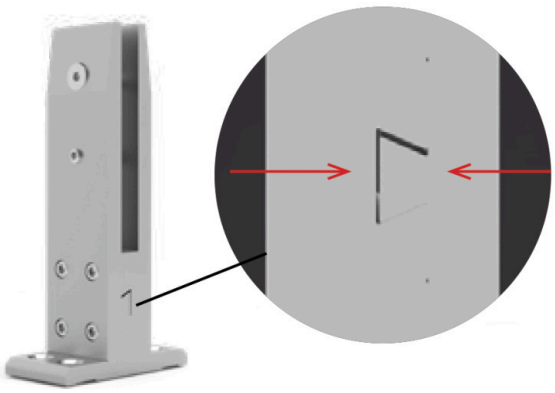

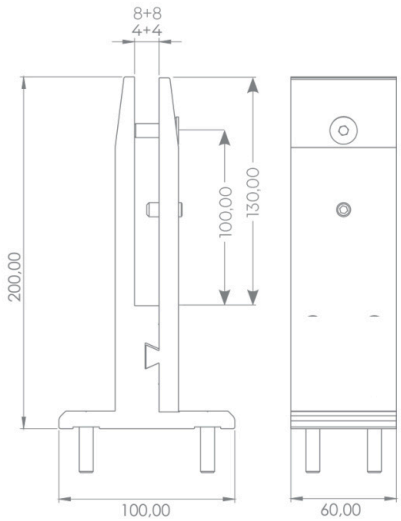

Installation
Video Code

R200
Glass Holder 20 cm
Cam Tutucu 20 cm



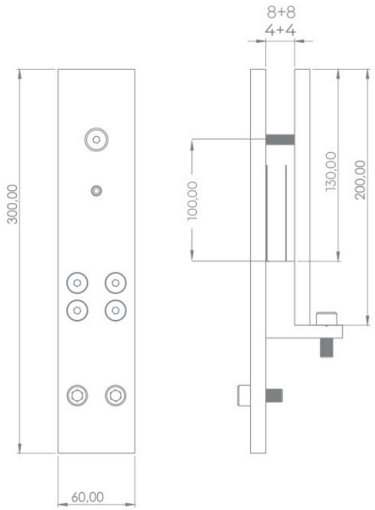

Installation
Video Code

R210
Glass Holder 20 cm
Cam Tutucu 20 cm



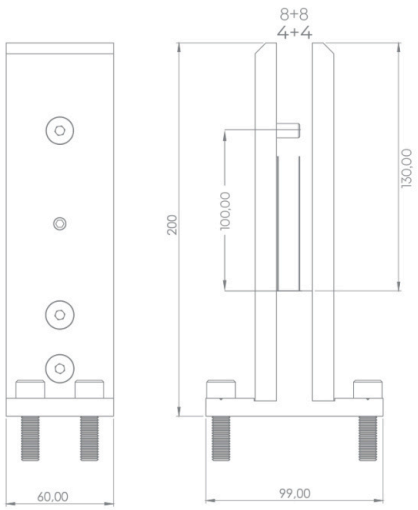

Installation
Video Code

R220
Glass Holder 20 cm
Cam Tutucu 20 cm

R400

Installation Video Code

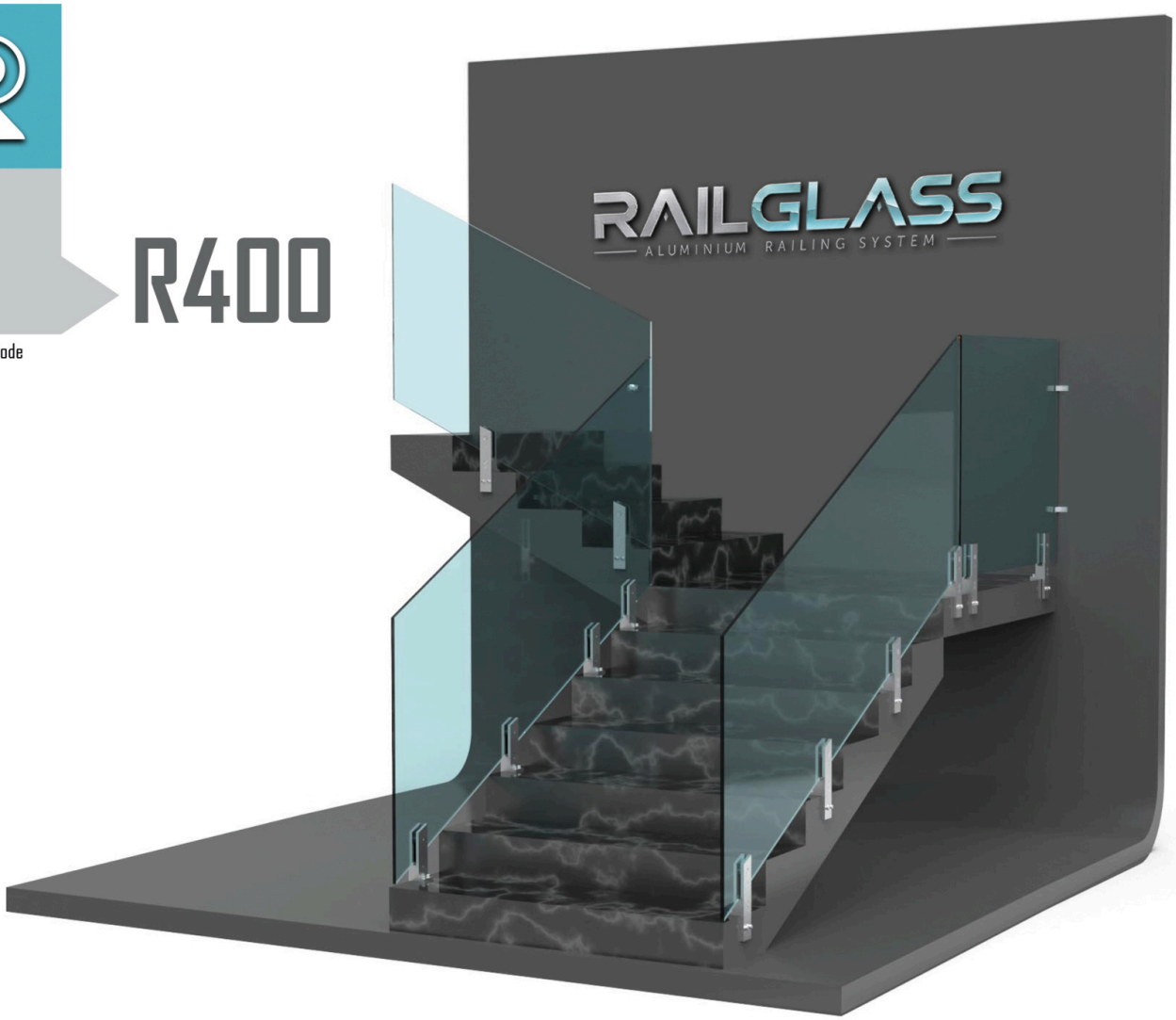

PRODUCT INFO

- **Glass Height Max 110 cm**
- **With 8+8+0,76/1,52 Glass, Weight Volume 300 kg/linear meter**
- **With 6+6+0,76/1,52 Glass, Weight Volume 300 kg/linear meter**
- **Availability for Partial Using (15 cm/20 cm)**
- **Easy Installation**
- **Anodize Finishing and RAL Colour Options**
- **Certificated System**

- Cam Yüksekliği Maksimum 110 cm
- 8+8+0,76/1,52 Cam ile, Ağırlık Hacmi 300 kg/lineer metre
- 6+6+0,76/1,52 Cam ile, Ağırlık Hacmi 300 kg/lineer metre
- Kısmi Kullanıma Uygunluk (15 cm/20 cm)
- Kolay Montaj
- Eloksal Kaplama ve RAL Renk Seçenekleri
- Sertifikalı Sistem

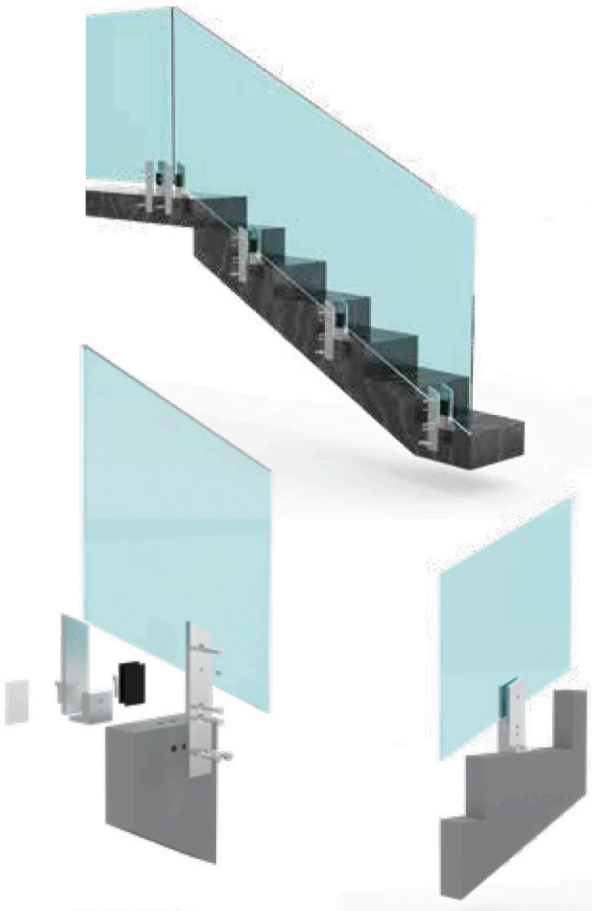

Testato/calcolato/certificato a livello internazionale:

GLASS FLOOR HOLDER



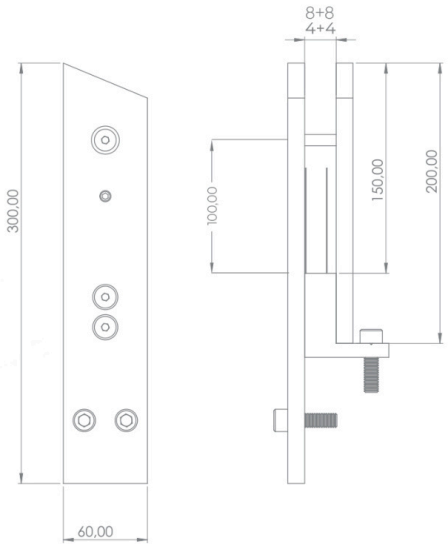

R410
Glass Holder 20 cm
Cam Tutucu 20 cm

Installation
Video Code



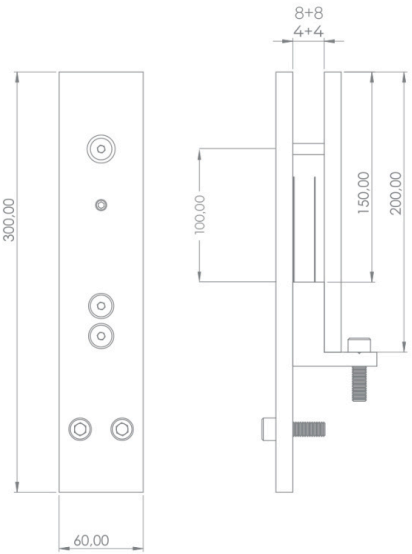

R420
Glass Holder 20 cm
Cam Tutucu 20 cm

Installation
Video Code



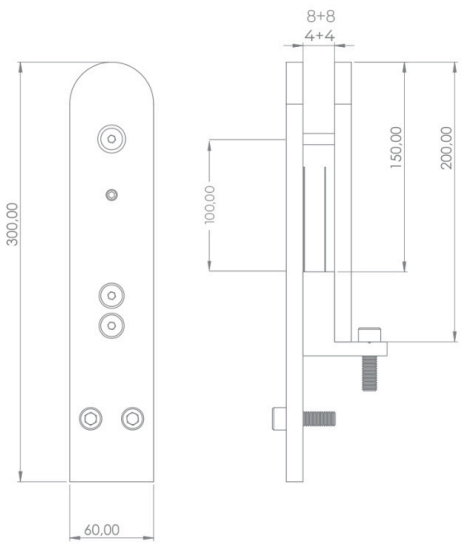

R430
Glass Holder 20 cm
Cam Tutucu 20 cm

Installation
Video Code



EXCELLENCE FROM ALL POINTS OF VIEW

HER AÇIDAN MÜKEMMELLİK







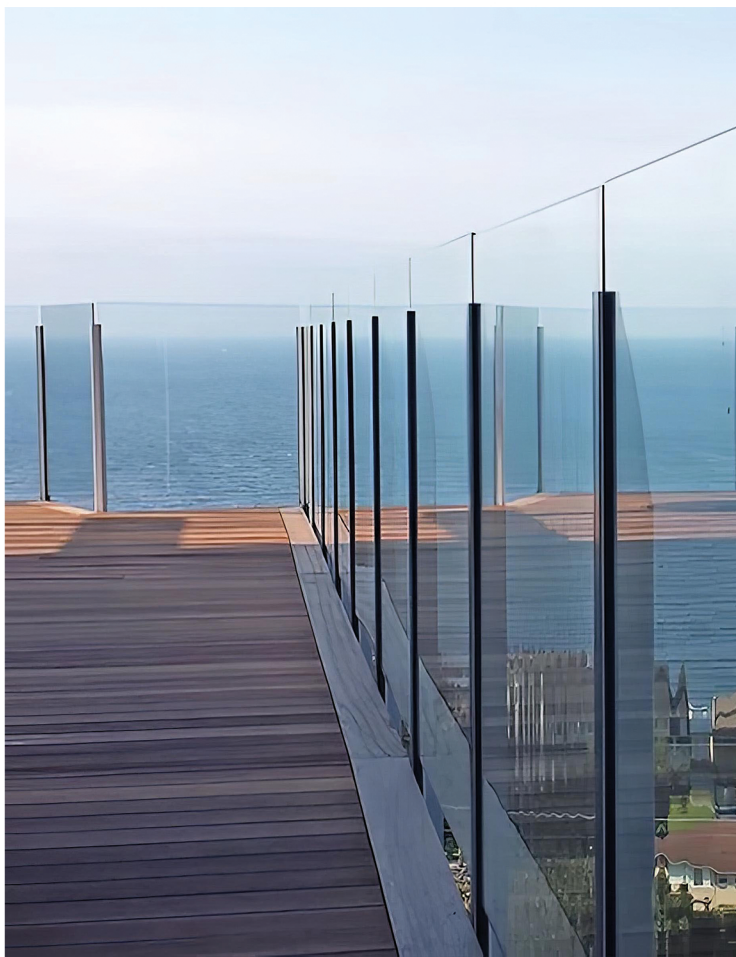





RAILGLASS

ALUMINIUM RAILING SYSTEM

R600

Installation Video Code



PRODUCT INFO

- **Glass Height Max 110 cm**
- **With 8+8+0,76/1,52 Glass, Weight Volume 300 kg/linear meter**
- **With 6+6+0,76/1,52 Glass, Weight Volume 300 kg/linear meter**
- **Availability for Partial Using (15 cm/20 cm)**
- **Easy Installation**
- **Anodize Finishing and RAL Colour Options**
- **Certificated System**

- Cam Yüksekliği Maksimum 110 cm
- 8+8+0,76/1,52 Cam ile, Ağırlık Hacmi 300 kg/lineer metre
- 6+6+0,76/1,52 Cam ile, Ağırlık Hacmi 300 kg/lineer metre
- Kısmi Kullanıma Uygunluk (15 cm/20 cm)
- Kolay Montaj
- Eloksal Kaplama ve RAL Renk Seçenekleri
- Sertifikalı Sistem



Testato/calcolato/certificato a livel :

GLASS FLOOR HOLDER

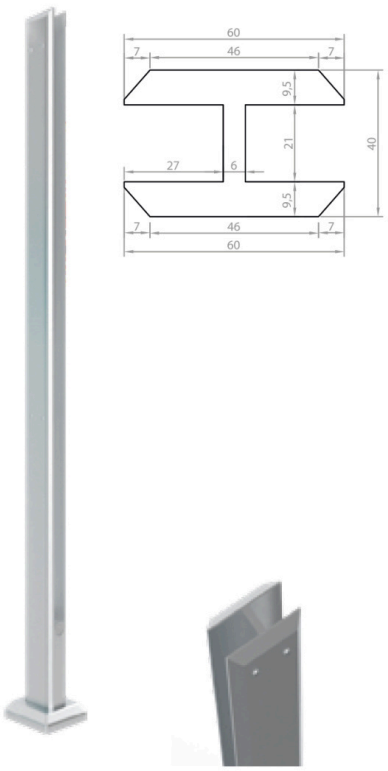

R630
Glass Holder 100 cm
Cam Tutucu 100 cm

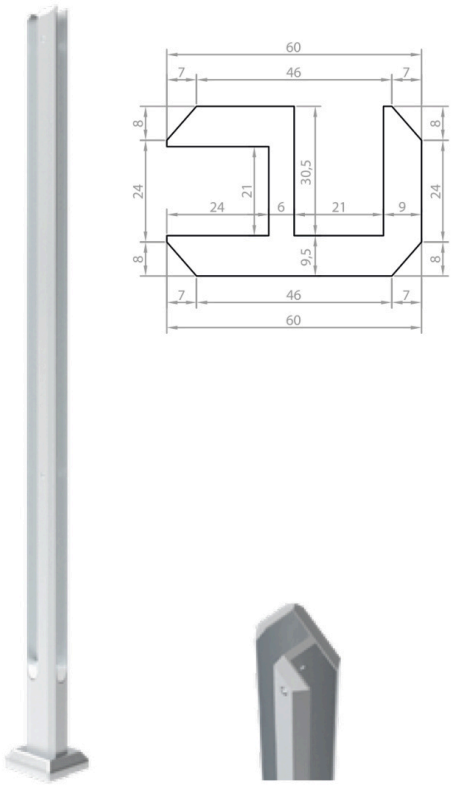

R630
Glass Holder 100 cm
Cam Tutucu 100 cm

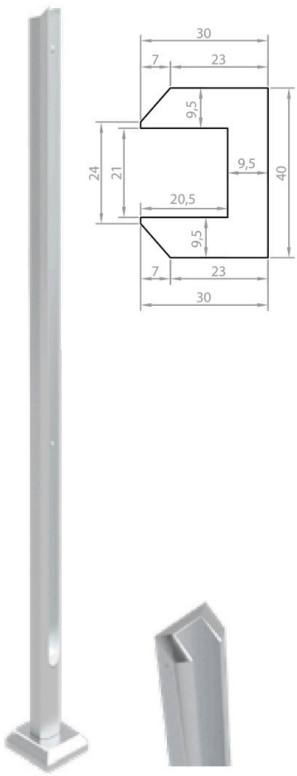

R630
Glass Holder 100 cm
Cam Tutucu 100 cm

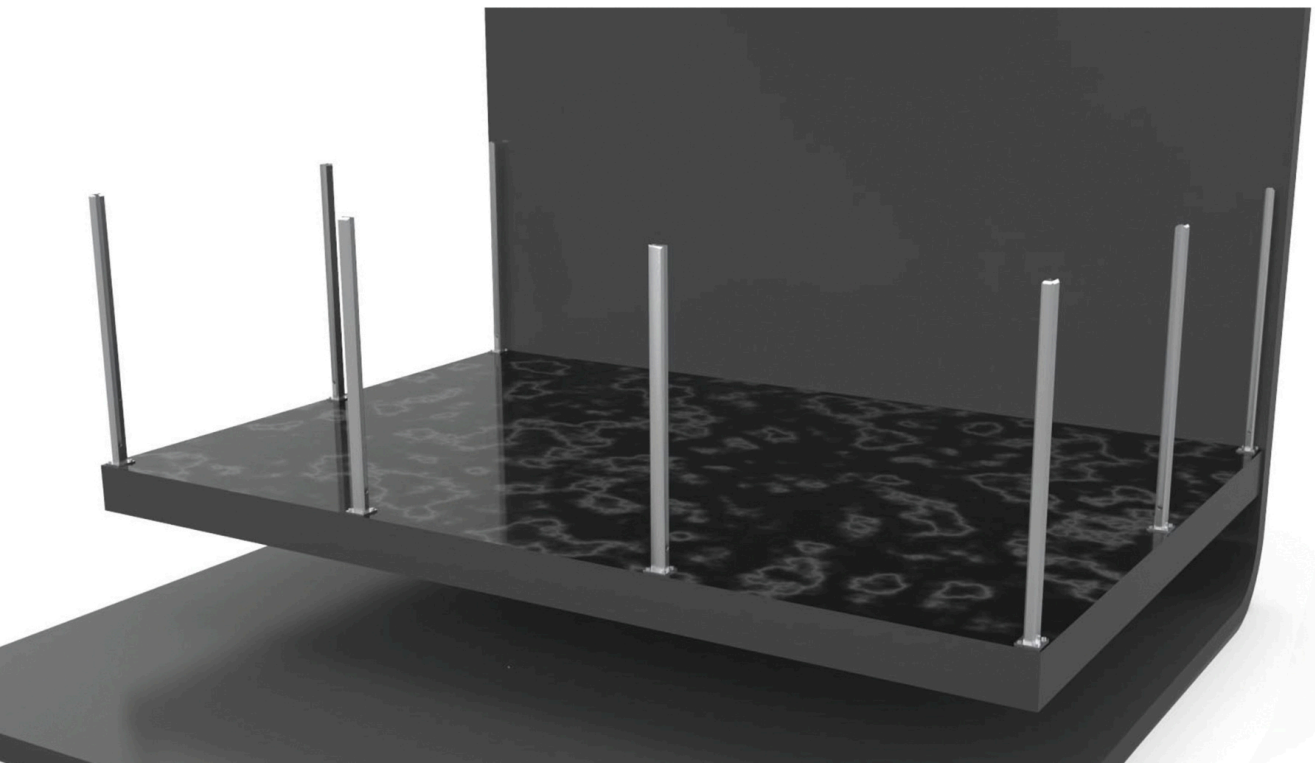

Installation
Video Code

R700

Installation Video Code



PRODUCT INFO

- **Glass Height Max 110 cm**
- **With 8+8+0,76/1,52 Glass, Weight Volume 300 kg/linear meter**
- **With 6+6+0,76/1,52 Glass, Weight Volume 300 kg/linear meter**
- **Availability for Partial Using (15 cm/20 cm)**
- **Easy Installation**
- **Anodize Finishing and RAL Colour Options**
- **Certificated System**

- Cam Yüksekliği Maksimum 110 cm
- 8+8+0,76/1,52 Cam ile, Ağırlık Hacmi 300 kg/lineer metre
- 6+6+0,76/1,52 Cam ile, Ağırlık Hacmi 300 kg/lineer metre
- Kısmi Kullanıma Uygunluk (15 cm/20 cm)
- Kolay Montaj
- Eloksal Kaplama ve RAL Renk Seçenekleri
- Sertifikalı Sistem



Testato/calcolato/certificato a livello internazionale:

GLASS FLOOR HOLDER



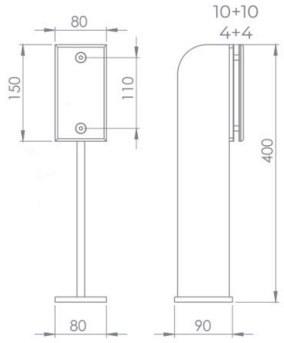

Installation
Video Code

R701
Glass Holder 40 cm
Cam Tutucu 40 cm



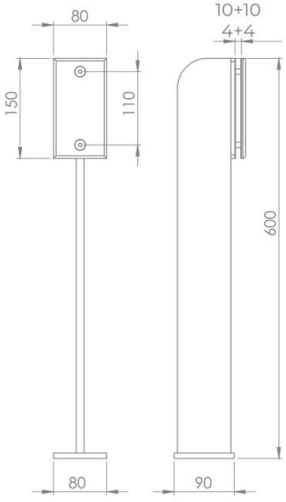

Installation
Video Code

R702
Glass Holder 60 cm
Cam Tutucu 60 cm



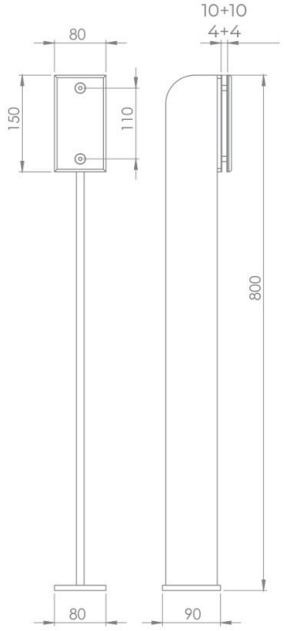

Installation
Video Code

R703
Glass Holder 80 cm
Cam Tutucu 80 cm

R800

Installation Video Code



PRODUCT INFO

- **Glass Height Max 110 cm**
- **With 8+8+0,76/1,52 Glass, Weight Volume 300 kg/linear meter**
- **With 6+6+0,76/1,52 Glass, Weight Volume 300 kg/linear meter**
- **Availability for Partial Using (15 cm/20 cm)**
- **Easy Installation**
- **Anodize Finishing and RAL Colour Options**
- **Certificated System**

- Cam Yüksekliği Maksimum 110 cm
- 8+8+0,76/1,52 Cam ile, Ağırlık Hacmi 300 kg/lineer metre
- 6+6+0,76/1,52 Cam ile, Ağırlık Hacmi 300 kg/lineer metre
- Kısmi Kullanıma Uygunluk (15 cm/20 cm)
- Kolay Montaj
- Eloksal Kaplama ve RAL Renk Seçenekleri
- Sertifikalı Sistem

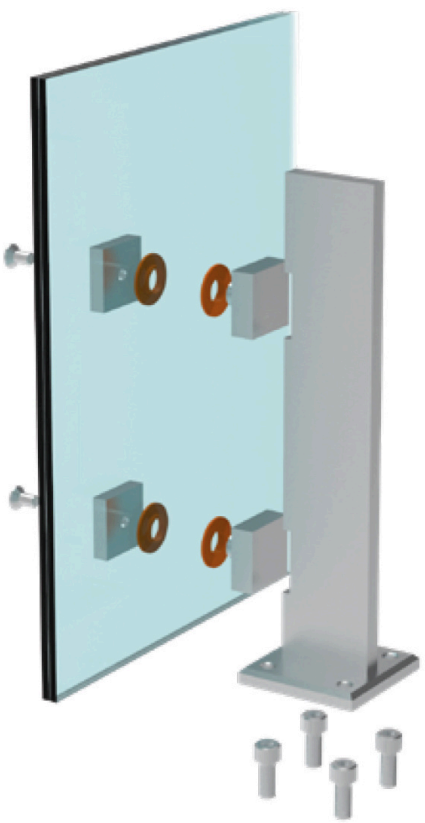

Testato/calcolato/certificato a livello internazionale:

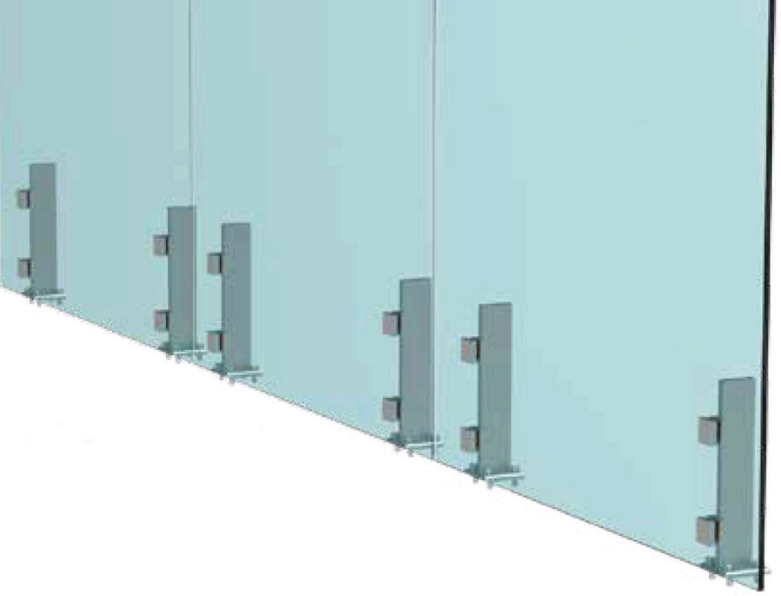

GLASS FLOOR HOLDER

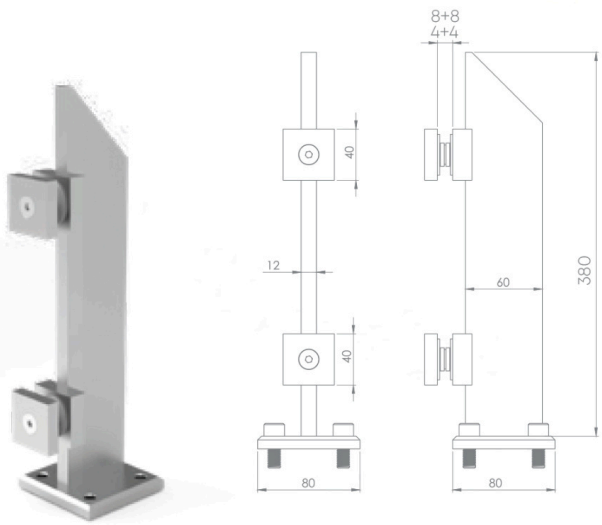

R801
Glass Holder
Cam Tutucu

Installation
Video Code

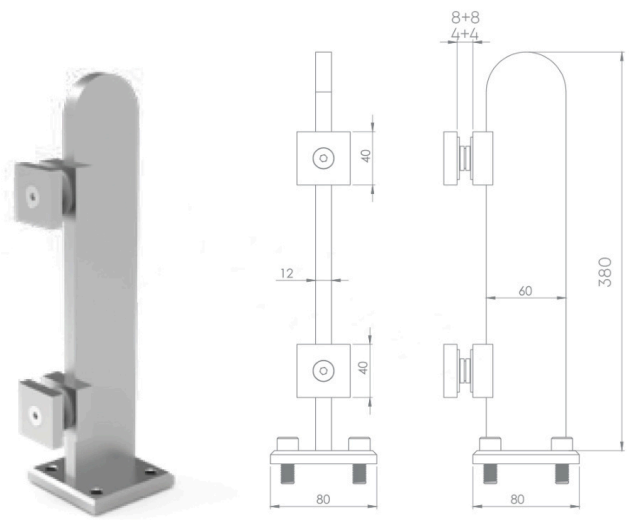

R802
Glass Holder
Cam Tutucu

Installation
Video Code

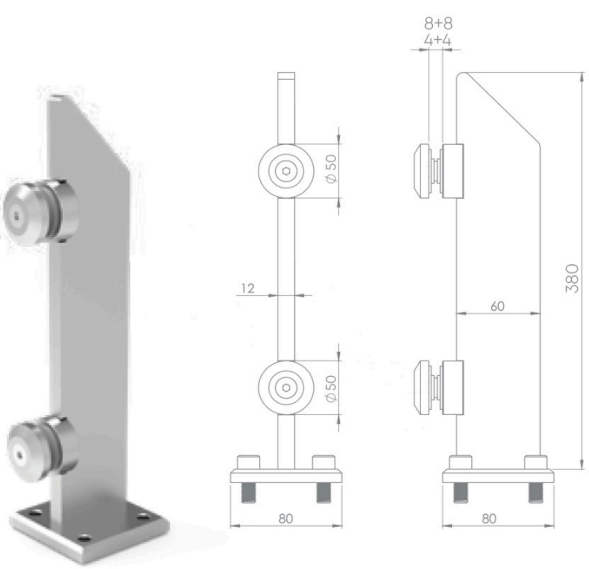

R803
Glass Holder
Cam Tutucu

Installation
Video Code

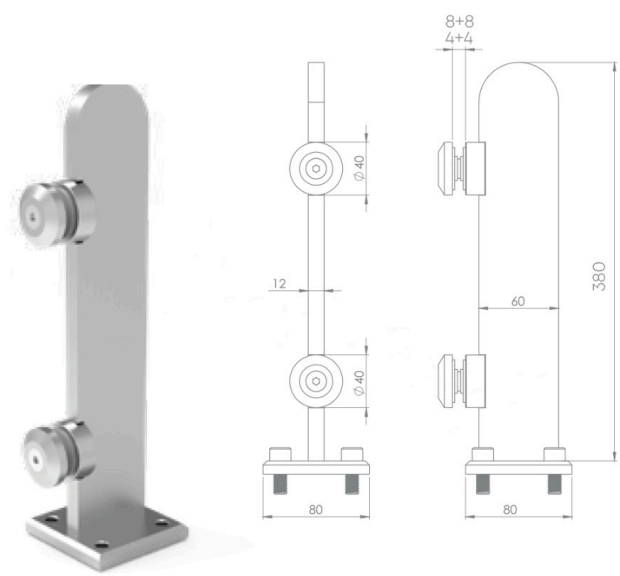

R804
Glass Holder
Cam Tutucu

Installation
Video Code

R1000

Installation Video Code



PRODUCT INFO

- **Glass Height Max 110 cm**
- **With 8+8+0,76/1,52 Glass, Weight Volume 300 kg/linear meter**
- **With 6+6+0,76/1,52 Glass, Weight Volume 300 kg/linear meter**
- **Availability for Partial Using (15 cm/20 cm)**
- **Easy Installation**
- **Anodize Finishing and RAL Colour Options**
- **Certificated System**

- Cam Yüksekliği Maksimum 110 cm
- 8+8+0,76/1,52 Cam ile, Ağırlık Hacmi 300 kg/lineer metre
- 6+6+0,76/1,52 Cam ile, Ağırlık Hacmi 300 kg/lineer metre
- Kısmi Kullanıma Uygunluk (15 cm/20 cm)
- Kolay Montaj
- Eloksal Kaplama ve RAL Renk Seçenekleri
- Sertifikalı Sistem





R1010
Glass Holder 14 cm
Cam Tutucu 14 cm

Installation
Video Code

Testato/calcolato/certificato a livello internazionale:

GLASS FLOOR HOLDER



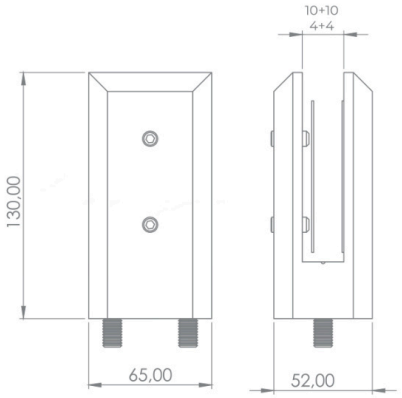

R1020
Glass Holder 13 cm
Cam Tutucu 13 cm

Installation
Video Code



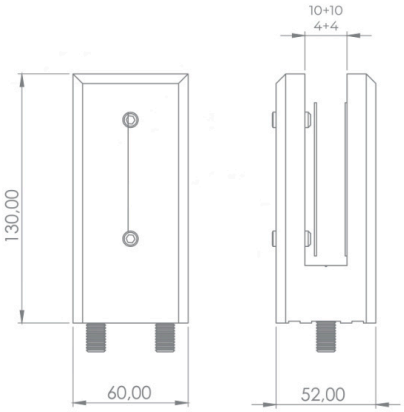

R1030
Glass Holder 13 cm
Cam Tutucu 13 cm

Installation
Video Code



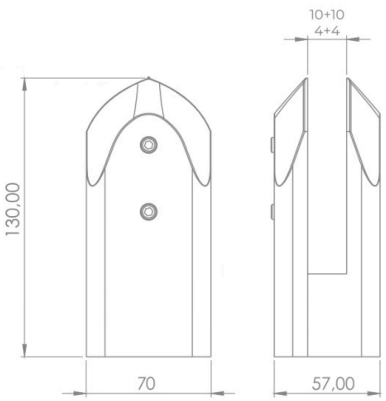

R1040
Glass Holder 13 cm
Cam Tutucu 13 cm

Installation
Video Code



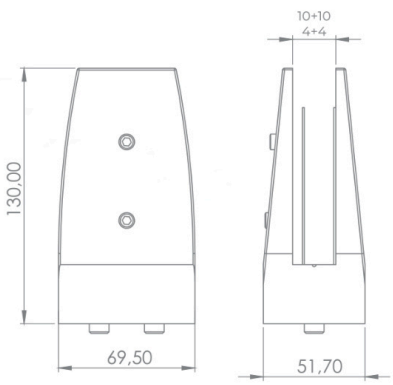

R1050
Glass Holder 13 cm
Cam Tutucu 13 cm

Installation
Video Code



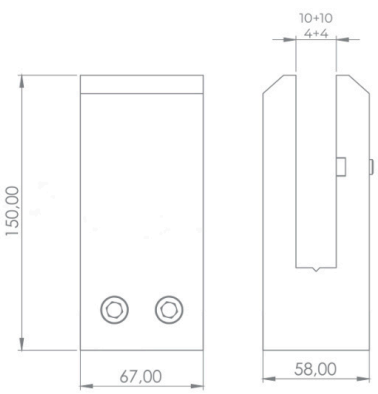

R1060
Glass Holder 14 cm
Cam Tutucu 14 cm

Installation
Video Code



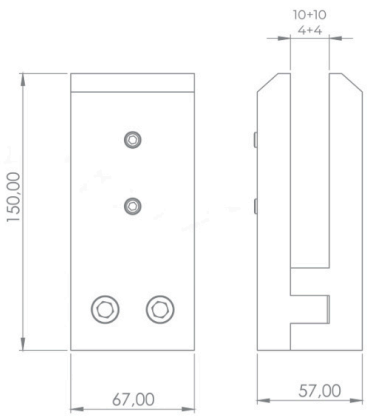

R1070
Glass Holder 14 cm
Cam Tutucu 14 cm

Installation
Video Code

R1000 / GLASS FLOOR HOLDER



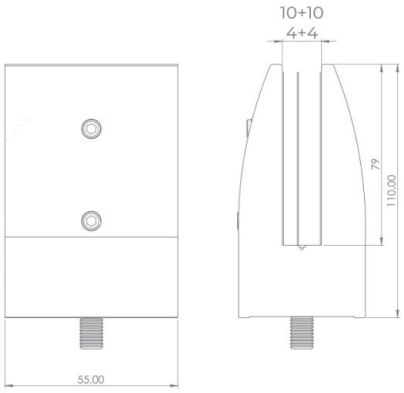

R1080
Glass Holder 11 cm
Cam Tutucu 11 cm

Installation
Video Code



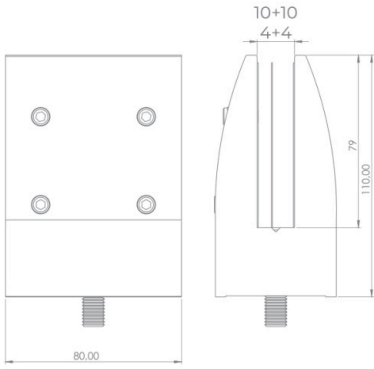

R1090
Glass Holder 11 cm
Cam Tutucu 11 cm

Installation
Video Code



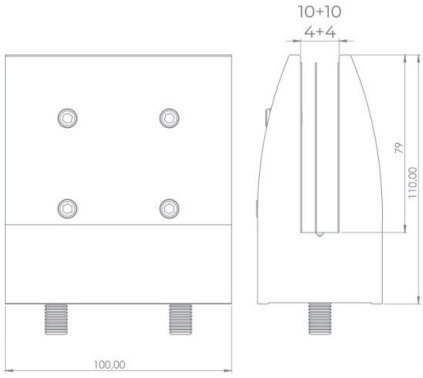

R1100
Glass Holder 11 cm
Cam Tutucu 11 cm

Installation
Video Code



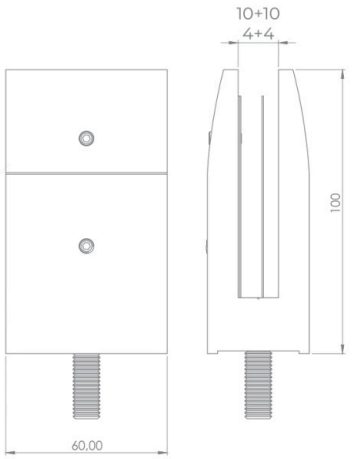

R1110
Glass Holder 11 cm
Cam Tutucu 11 cm

Installation
Video Code



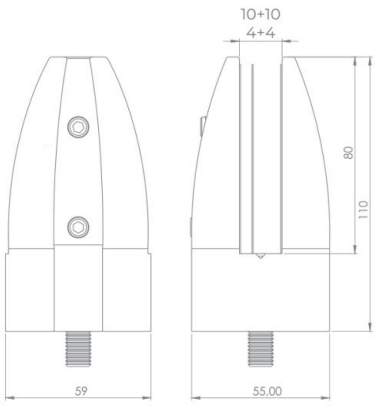

R1120
Glass Holder 11 cm
Cam Tutucu 11 cm

Installation
Video Code



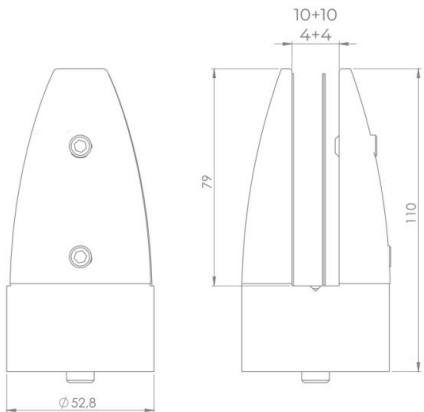

R1130
Glass Holder 11 cm
Cam Tutucu 11 cm

Installation
Video Code

R2000

Installation Video Code







R2010
Glass Holder Square
Cam Tutucu Kare

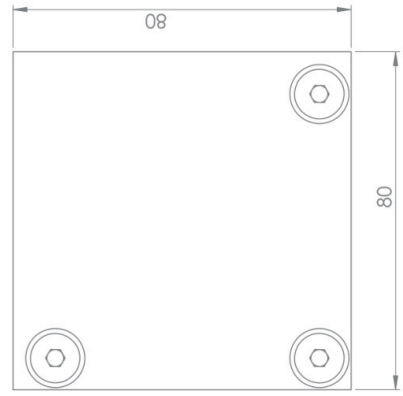





R2011
Screw
Vida



R2012
8 Metric Anchor
8 Metrik Dubel

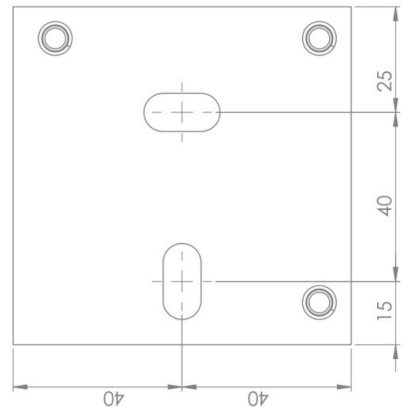

R2000 P

Installation Video Code

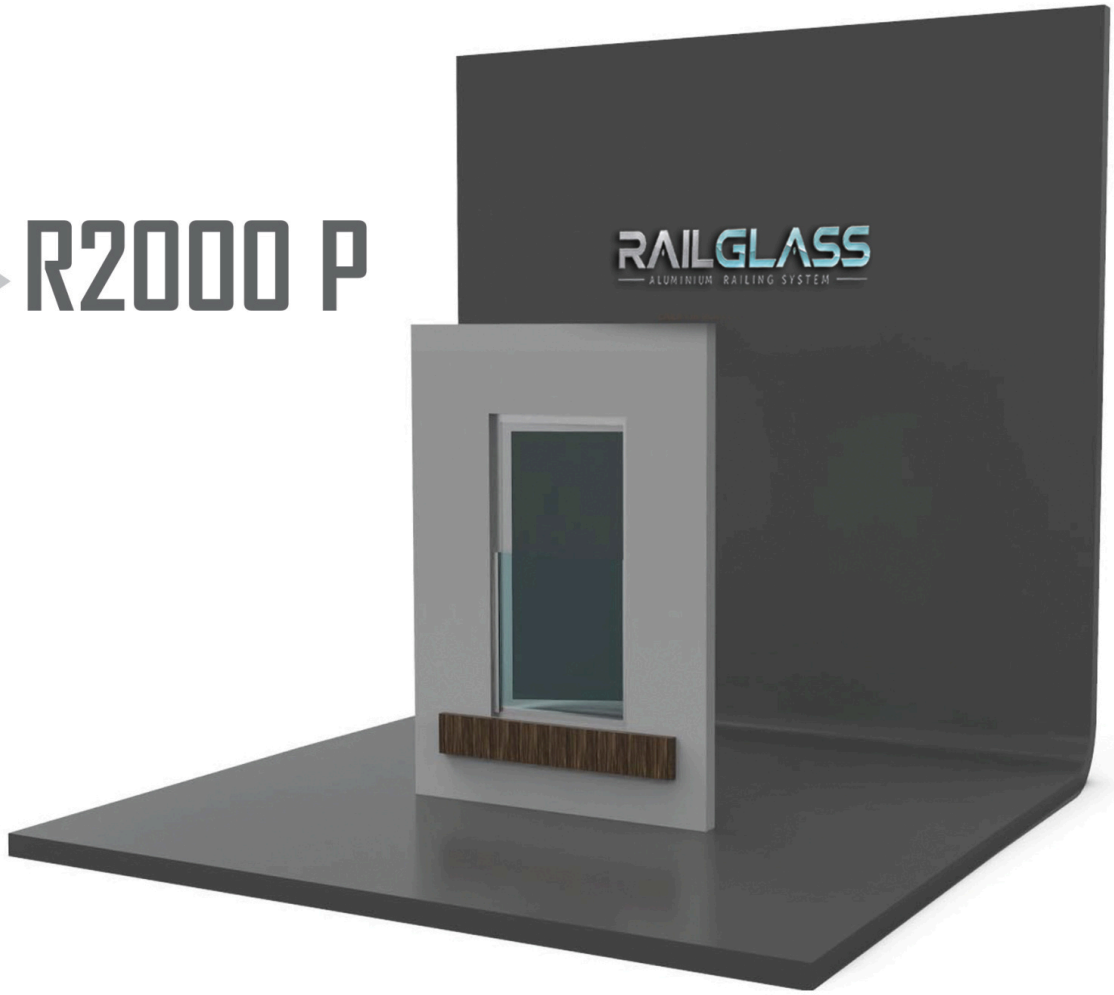

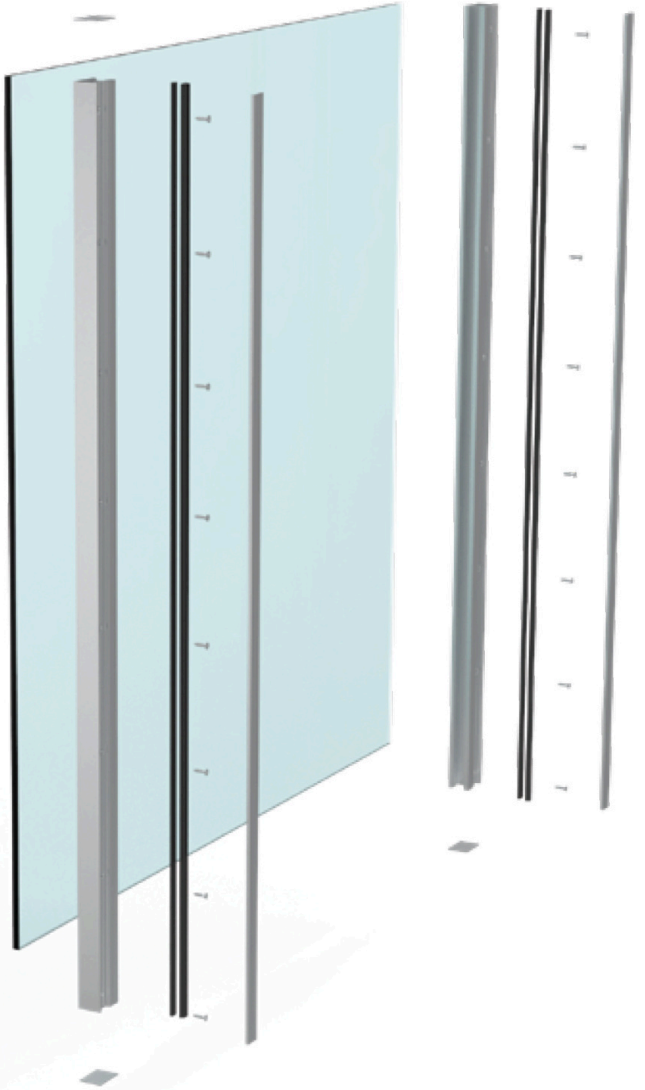



R1010
French Balcony Glass
Fransız Balkon Camı

R2100 P

Installation Video Code



PRODUCT INFO

- **Glass Height Max 110 cm**
- **With 8+8+0,76/1,52 Glass, Weight Volume 300 kg/linear meter**
- **With 6+6+0,76/1,52 Glass, Weight Volume 300 kg/linear meter**
- **Availability for Partial Using (15 cm/20 cm)**
- **Easy Installation**
- **Anodize Finishing and RAL Colour Options**
- **Certificated System**

- Cam Yüksekliği Maksimum 110 cm
- 8+8+0,76/1,52 Cam ile, Ağırlık Hacmi 300 kg/lineer metre
- 6+6+0,76/1,52 Cam ile, Ağırlık Hacmi 300 kg/lineer metre
- Kısmi Kullanıma Uygunluk (15 cm/20 cm)
- Kolay Montaj
- Eloksal Kaplama ve RAL Renk Seçenekleri
- Sertifikalı Sistem

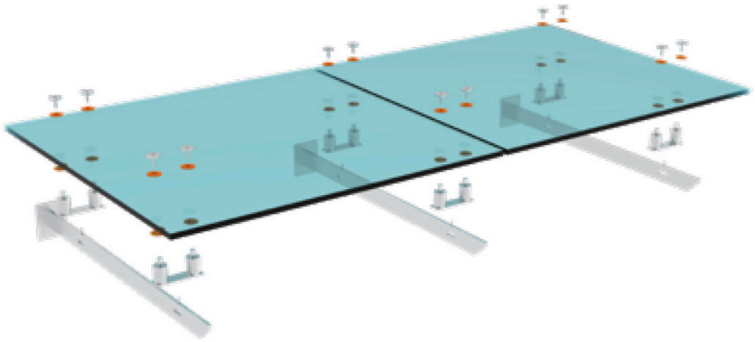

Testato/calcolato/certificato a livello internazionale:

GLASS FLOOR HOLDER

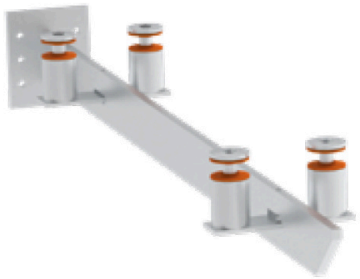

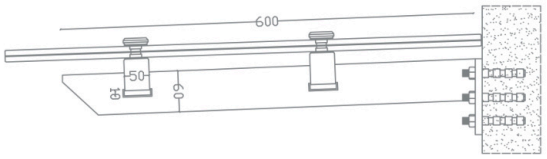

Installation
Video Code

R1020
Exterior Door Porch 60 cm
Dış Kapı Verandası

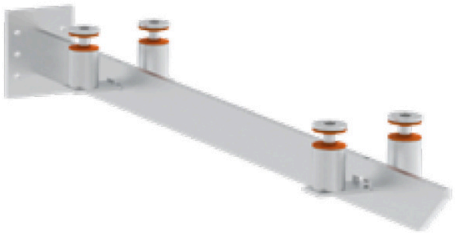

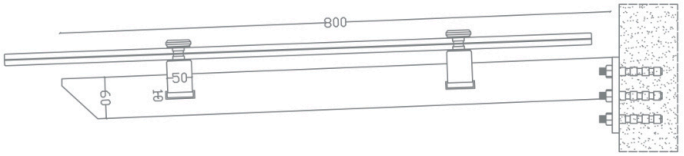

Installation
Video Code

R1040
Exterior Door Porch 80 cm
Dış Kapı Verandası

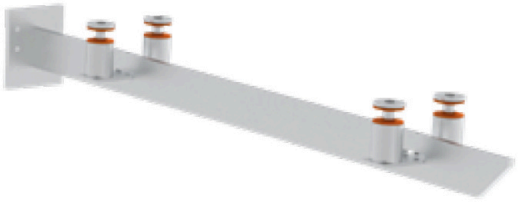

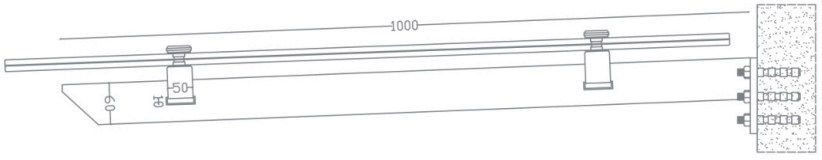

Installation
Video Code

R1060
Exterior Door Porch 100 cm
Dış Kapı Verandası

R3000

Installation Video Code



PRODUCT INFO

- **Glass Height Max 110 cm**
- **With 8+8+0,76/1,52 Glass, Weight Volume 300 kg/linear meter**
- **With 6+6+0,76/1,52 Glass, Weight Volume 300 kg/linear meter**
- **Availability for Partial Using (15 cm/20 cm)**
- **Easy Installation**
- **Anodize Finishing and RAL Colour Options**
- **Certificated System**

- Cam Yüksekliği Maksimum 110 cm
- 8+8+0,76/1,52 Cam ile, Ağırlık Hacmi 300 kg/lineer metre
- 6+6+0,76/1,52 Cam ile, Ağırlık Hacmi 300 kg/lineer metre
- Kısmi Kullanıma Uygunluk (15 cm/20 cm)
- Kolay Montaj
- Eloksal Kaplama ve RAL Renk Seçenekleri
- Sertifikalı Sistem



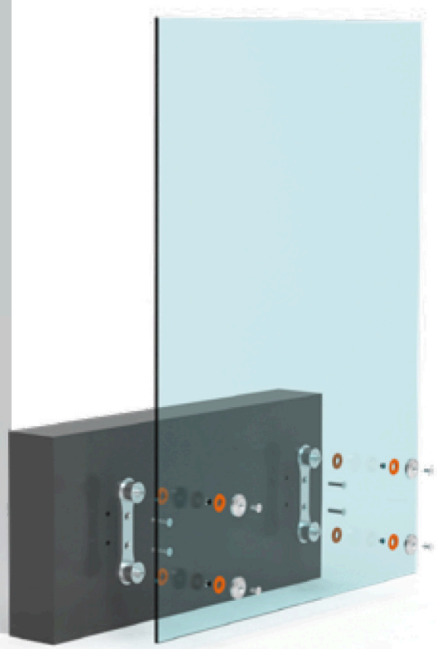

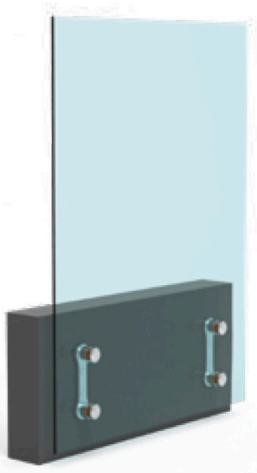

Testato/calcolato/certificato a livello internazionale:

EN1991 · EN1990 · NEN 2608 · DIN18008 · AbP · SIA 261:2014 · BS6180 · WTCB & CSTC · NBN B03-004 · Applus · CTE · AVIS TECHNIQUE

GLASS FLOOR HOLDER

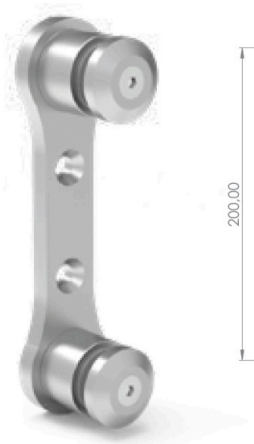

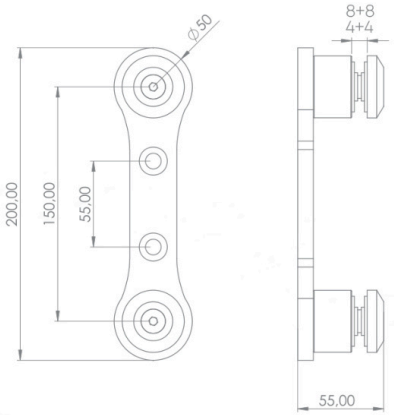

R3010
Glass Adapter
Cam Adaptörü

Installation
Video Code

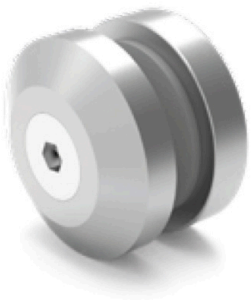

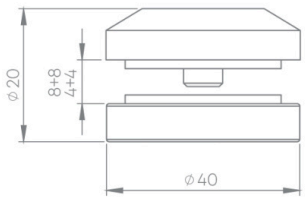

R3020
Middle Glass Support
Orta Cam Desteği

Installation
Video Code



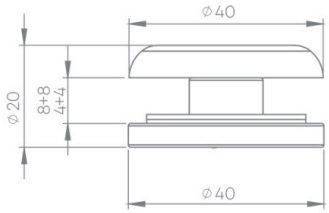

R3030
Middle Glass Support
Orta Cam Desteği

Installation
Video Code



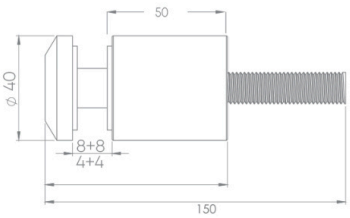

R3040
Glass Adapter
Cam Adaptörü

Installation
Video Code



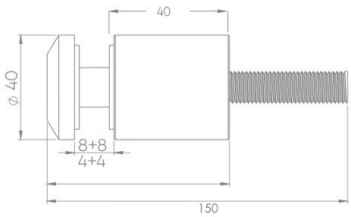

R3050
Glass Adapter
Cam Adaptörü

Installation
Video Code



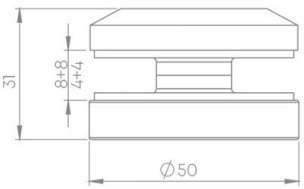

R3060
Middle Glass Support
Orta Cam Desteği

Installation
Video Code

R3000

Installation Video Code



PRODUCT INFO

- **Glass Height Max 110 cm**
- **With 8+8+0,76/1,52 Glass, Weight Volume 300 kg/linear meter**
- **With 6+6+0,76/1,52 Glass, Weight Volume 300 kg/linear meter**
- **Availability for Partial Using (15 cm/20 cm)**
- **Easy Installation**
- **Anodize Finishing and RAL Colour Options**
- **Certificated System**

- Cam Yüksekliği Maksimum 110 cm
- 8+8+0,76/1,52 Cam ile, Ağırlık Hacmi 300 kg/lineer metre
- 6+6+0,76/1,52 Cam ile, Ağırlık Hacmi 300 kg/lineer metre
- Kısmi Kullanıma Uygunluk (15 cm/20 cm)
- Kolay Montaj
- Eloksal Kaplama ve RAL Renk Seçenekleri
- Sertifikalı Sistem



Testato/calcolato/certificato a livello internazionale:

GLASS FLOOR HOLDER

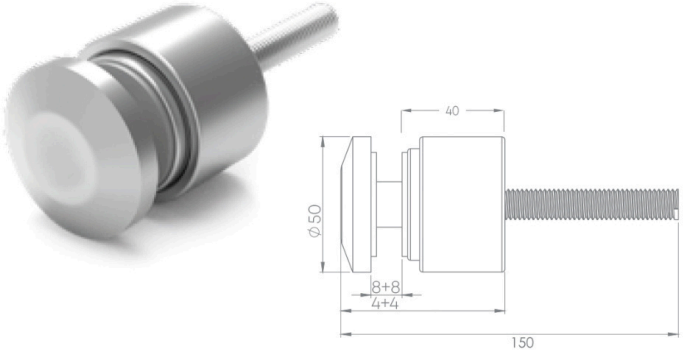

R3070
Glass Adapter
Cam Adaptörü

Installation
Video Code

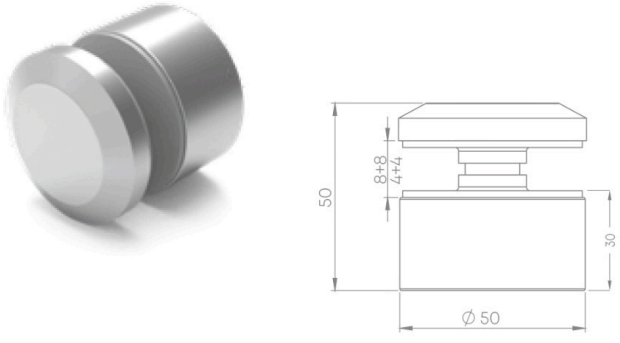

R3080
Glass Adapter
Cam Adaptörü

Installation
Video Code

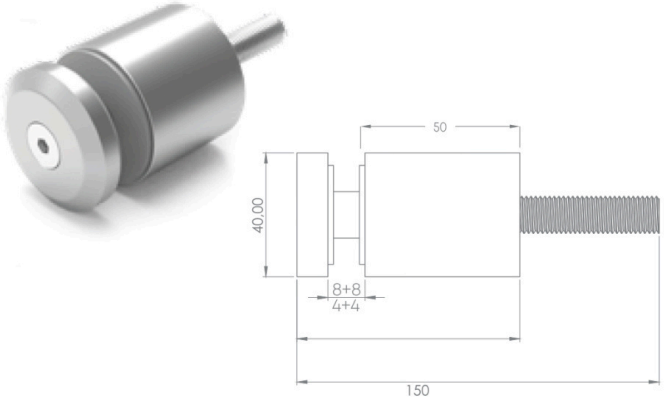

R3090
Glass Adapter
Cam Adaptörü

Installation
Video Code

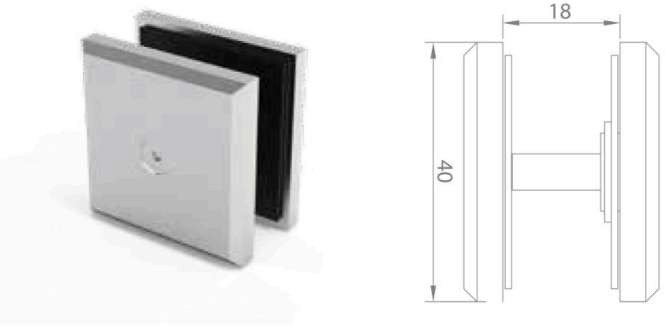

R3020-K
Middle Glass Support
Orta Cam Desteği

Installation
Video Code

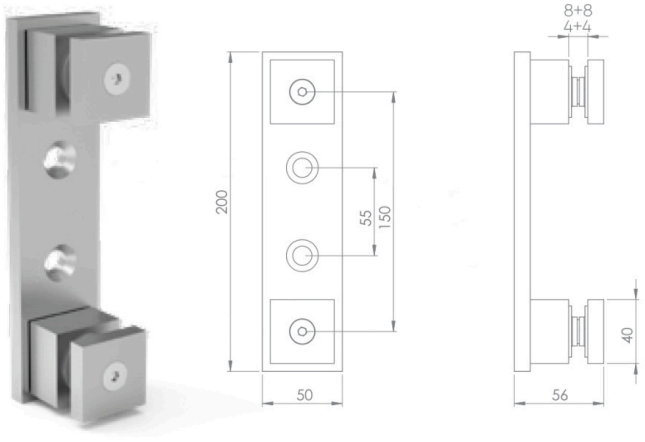

R3010-K
Glass Adapter
Cam Adaptörü

Installation
Video Code

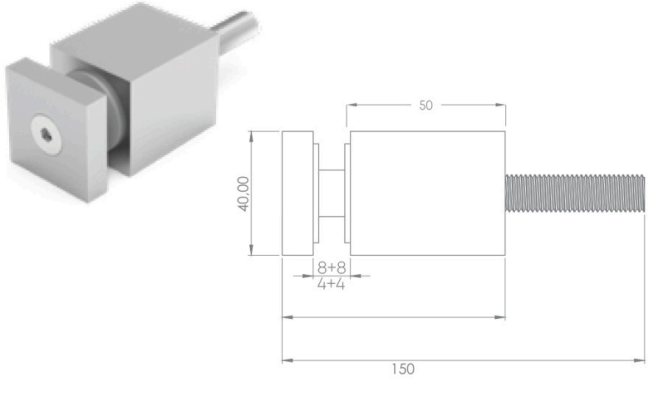

R3030-K
Glass Adapter
Cam Adaptörü

Installation
Video Code

R4000

Installation Video Code



PRODUCT INFO

- **Glass Height Max 110 cm**
- **With 8+8+0,76/1,52 Glass, Weight Volume 300 kg/linear meter**
- **With 6+6+0,76/1,52 Glass, Weight Volume 300 kg/linear meter**
- **Availability for Partial Using (15 cm/20 cm)**
- **Easy Installation**
- **Anodize Finishing and RAL Colour Options**
- **Certificated System**

- Cam Yüksekliği Maksimum 110 cm
- 8+8+0,76/1,52 Cam ile, Ağırlık Hacmi 300 kg/lineer metre
- 6+6+0,76/1,52 Cam ile, Ağırlık Hacmi 300 kg/lineer metre
- Kısmi Kullanıma Uygunluk (15 cm/20 cm)
- Kolay Montaj
- Eloksal Kaplama ve RAL Renk Seçenekleri
- Sertifikalı Sistem



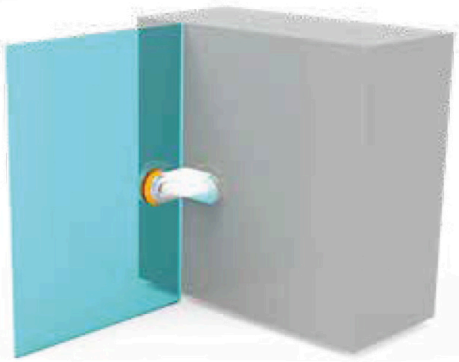

Testato/calcolato/certificato a livello internazionale:

GLASS FLOOR HOLDER



R4010

Installation
Video Code



R4020

Installation
Video Code



R4030

Installation
Video Code



R4040

Installation
Video Code



R4050

Installation
Video Code



R4060

Installation
Video Code



R4070

Installation
Video Code



R4080

Installation
Video Code



R4090

Installation
Video Code



R4100

Installation
Video Code



R4110

Installation
Video Code



R4120

Installation
Video Code

GLASS FLOOR HOLDER

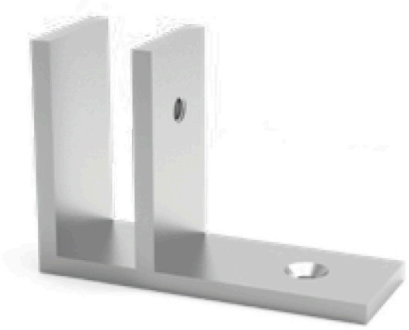

R4130

Installation
Video Code

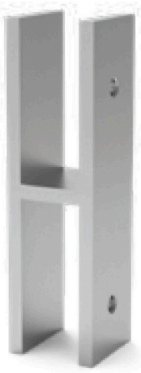

R4140

Installation
Video Code



R4150

Installation
Video Code



R4160

Installation
Video Code



R4170

Installation
Video Code



R4180

R4190

R5000

Installation Video Code



PRODUCT INFO

- **Glass Height Max 110 cm**
- **With 8+8+0,76/1,52 Glass, Weight Volume 300 kg/linear meter**
- **With 6+6+0,76/1,52 Glass, Weight Volume 300 kg/linear meter**
- **Availability for Partial Using (15 cm/20 cm)**
- **Easy Installation**
- **Anodize Finishing and RAL Colour Options**
- **Certificated System**

- Cam Yüksekliği Maksimum 110 cm
- 8+8+0,76/1,52 Cam ile, Ağırlık Hacmi 300 kg/lineer metre
- 6+6+0,76/1,52 Cam ile, Ağırlık Hacmi 300 kg/lineer metre
- Kısmi Kullanıma Uygunluk (15 cm/20 cm)
- Kolay Montaj
- Eloksal Kaplama ve RAL Renk Seçenekleri
- Sertifikalı Sistem



Testato/calcolato/certificato a livello internazionale:

GOEDKEURING VOLGENS BOUWBESLUIT EN1991 | GOEDKEURING VOLGENS BOUWBESLUIT EN1990 | NEN 2608 | STATISCHE BERECHNUNG nach DIN18008 | AbP BAUART GEPRÜFT | SIA 261:2014 | BS6180 APPROVED | Tested at WTCB.be & CSTC.be | NBN B03-004 | Applus+ Validated | CTE | AVIS TECHNIQUE

GLASS PILLAR

Installation
Video Code

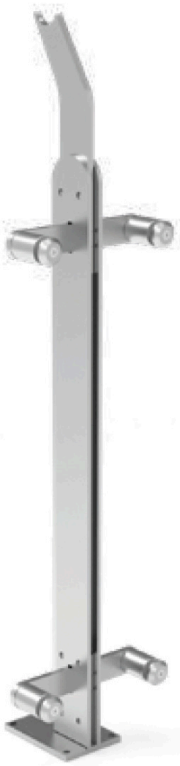

R5010

Installation
Video Code



R5020

Installation
Video Code



R5030

Installation
Video Code



R5040

Installation
Video Code



R5050

Installation
Video Code



R5060

Installation
Video Code



R5070

Installation
Video Code



R5080

R6000

Installation Video Code



R6010

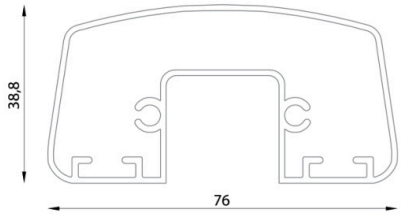





R6020

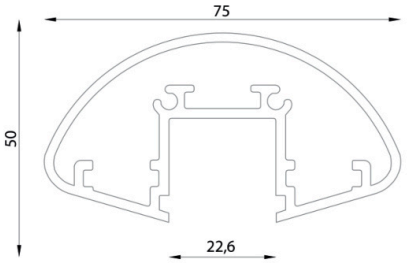





R6030

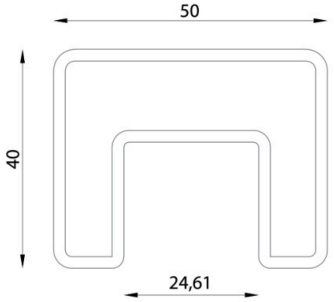



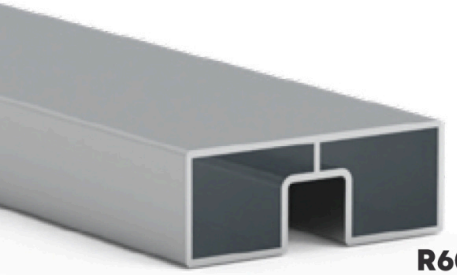

R6040

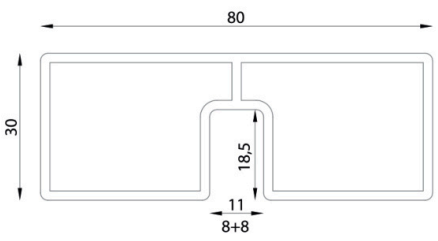



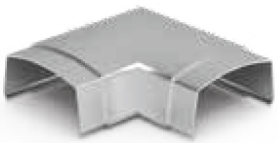

R6011



R6012



R6013



R6014



R6021



R6022



R6023



R6024

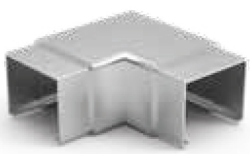

R6031



R6032

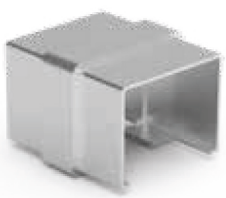

R6033



R6034



R6041



R6042



R6043



R6044

R6000

Installation Video Code

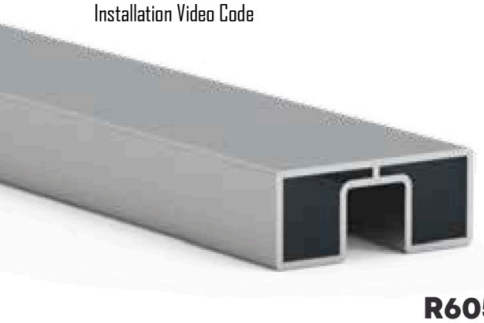

R6050

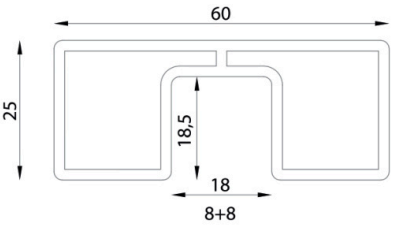

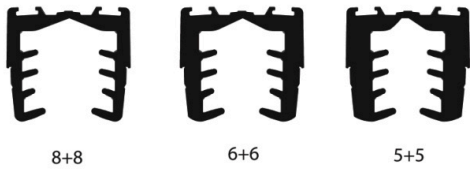



R6060

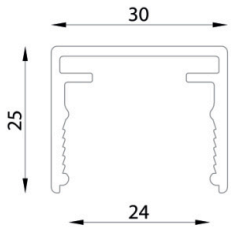





R6070

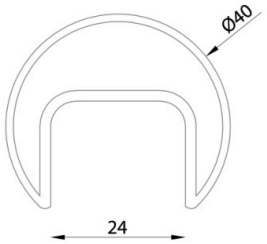





R6080

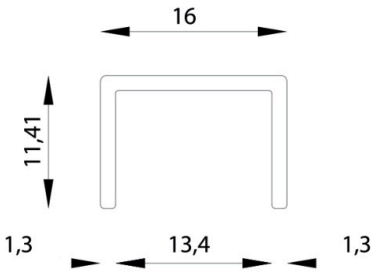





R6090

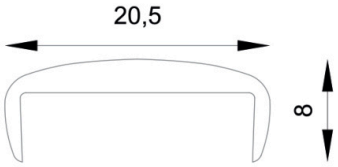



R6051



R6052



R6053



R6054



R6061



R6062



R6063



R6064



R6071



R6072



R6073



R6074



R6081



R6082



R6091



R6092

color scale
Renk Skalası







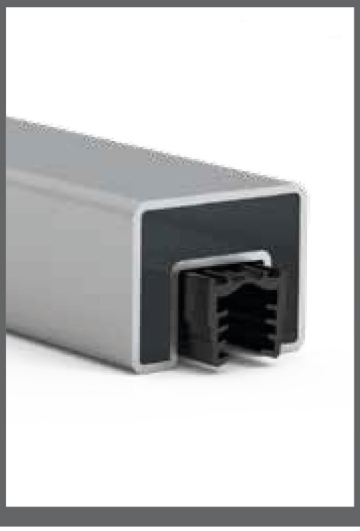



for more color options RAL code

RAL Code: 7016	RAL Code: 7034	RAL Code: 7044	RAL Code: 7021	RAL Code: 9005	RAL Code: 9016	RAL Code: 9006
RAL Code: 9010	RAL Code: 9001	RAL Code: 7016 Fine Texture	RAL Code: 7016 Oknoplast Craftwood	RAL Code: 1035	RAL Code: 8007	RAL Code: 7039

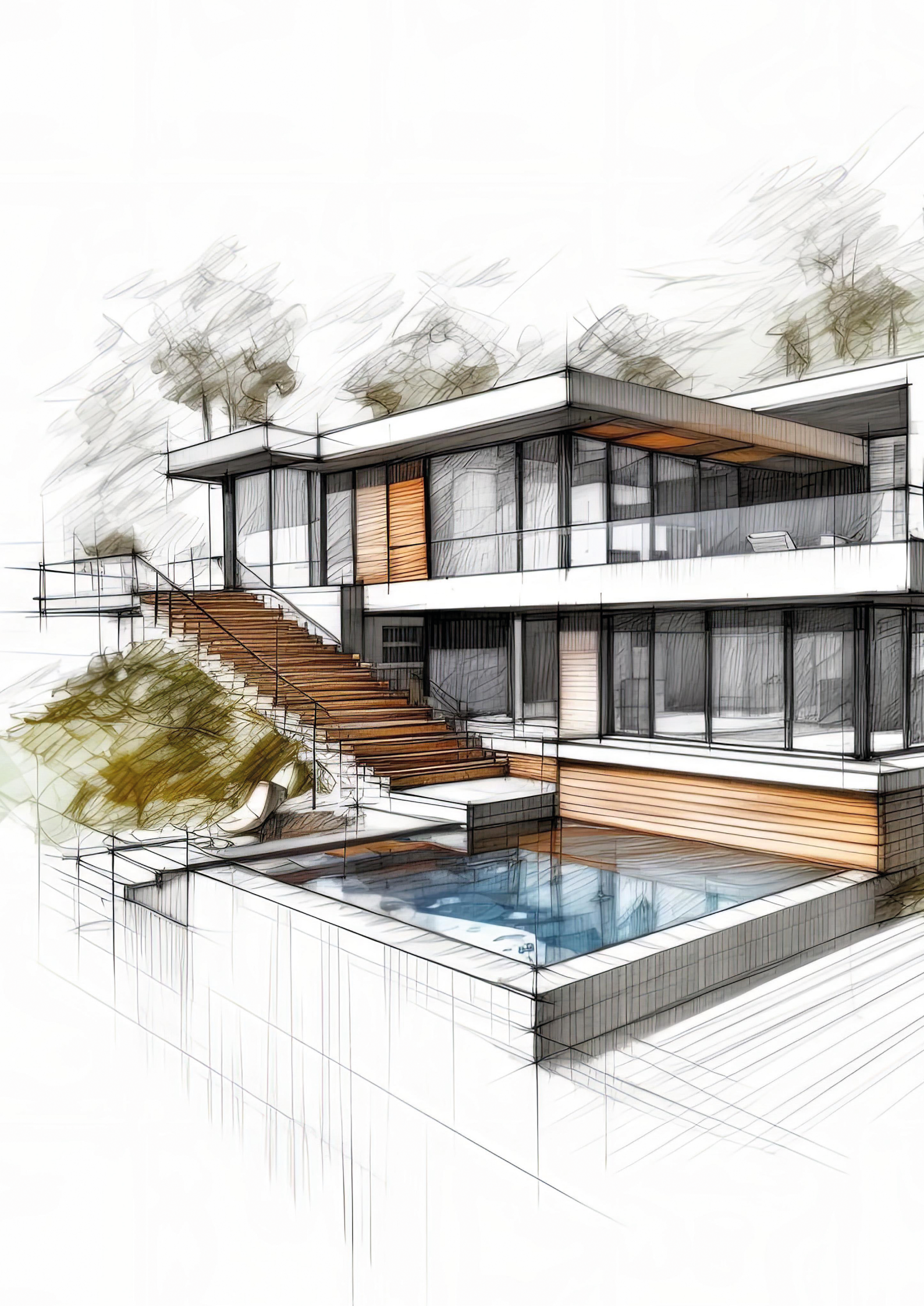

RAILGLASS
ALUMINIUM RAILING SYSTEM

Fevziçakmak mah.şehit hamdi karagöz cad 4AA
Karatay/KONYA
Tel: +90 546 262 90 15
info@railglass.com.tr
www.railglass.com.tr